AUTUMN 2012

WEB EDITION

THE NAVAL ENGINEER

INDEX ISSUE

This magazine is the property of
Her Majesty's Government.
It is produced on behalf of the
Chief Naval Engineer Officer.

WEB EDITION

Jump to Contents

One of the new members of the Engineer Flag Officers' Meeting:

Rear Admiral Mark Beverstock BSc(Eng) CEng FIET
Chief Strategic Systems Executive

CSSE is part of the Defence Equipment and Support, Director Submarines Operating Centre. CSSE has overall responsibility to the First Sea Lord for assuring the delivery of a robust and coherent programme to provide the United Kingdom's independent nuclear deterrent.

Rear Admiral Beverstock assumed the duties of Chief Strategic Systems Executive on 27 July 2012.

Born in 1964, he joined the Royal Navy in 1981 and, after completing his fleet time in HMS Ambuscade during the Falklands campaign, he studied for his degree at the Royal Naval Engineering College Manadon. Specialising as a Submarine Weapon Engineer, his seagoing complement appointments have been in HMS Repulse and HMS Vanguard where he completed the build, first of class trials, a demonstration Trident missile firing and first operational deployment.

The majority of his career has been spent within acquisition. He has had a number of appointments in the Strategic Weapons Project Team where he had responsibility for project management and delivery of the Strategic Systems major update programme, an appointment as the Demonstration and Shakedown Operations Technical Director, and an appointment as Deputy CSSE.

He has also worked extensively in the Ministry of Defence on the Naval Staff and in the Equipment Capability area; he headed up the Wider Independent Nuclear Deterrent Options Team assisting with the publication of the 2006 White Paper on the future of the Nuclear Deterrent and, more recently, as the Head of Deterrent and Underwater Capability where he assisted with achievement of Initial Gate for the Successor Deterrent and full programme approval for the Astute Class.

More widely he has been the Commanding Officer of HMS Neptune (HM Naval Base Clyde) and attended the Royal College of Defence Studies in 2004.

He is married to Morag and has three children: Sarah (22), Andrew (19) and Jamie (11). His main interest is his family, but he also enjoys cycling, triathlon and classical music (amateur flautist).

The members of the Engineer Flag Officers' meeting are:

Chairman: Rear Admiral S.R. Lister	*Director, Submarines; Chief Naval Engineer Officer*
Vice Admiral A.D.H. Mathews	*Chief of Materiel (Fleet) and Chief of Fleet Support*
Rear Admiral M.A. Beverstock	*Chief Strategic Systems Executive*
Rear Admiral S.B. Brunton	*Director Acquisition*
Rear Admiral C.J. Hockley	*Flag Officer Regional Forces, Flag Officer Reserves and Flag Officer Scotland, Northern England, Wales & Northern Ireland*
Rear Admiral I.M. Jess	*Assistant Chief of Naval Staff (Support)*
Rear Admiral H.H Parker	*Director Precision Attack*
Rear Admiral S.J. Woodcock	*Naval Secretary*
M.E. Elliot Esq	*Director Safety & Engineering*
A.R. Graham Esq	*Director Ships*
Commodore P.M. Burrell RN	*Head of Training, Education, Skills and Assessment*
Commodore C.R. Forsey RN	*Navy Command HQ Assistant Chief of Staff (Information Superiority)*
Commodore M.J. Toy RN	*Head of Helicopters 1*
Commodore D. Preston RFA	*Chief RFA Engineer Officer*
Warrant Officer D.J. Archer	*Chief Naval Engineer Warrant Officer*

Jump to Contents

THE NAVAL ENGINEER

Contents

• The magazine is published for information, entertainment and to promote discussion on matters of general interest to engineers of all sub specialisations (Air, Marine, Weapon and Training Management).
• Articles and letters are welcomed and may be submitted in any format from handwriting to e-mail, CD or DVD.
• All correspondence to: The Editor, The Naval Engineer, HMS Collingwood, Fareham, Hants PO14 1AS.
Tel 01329 333895 (Military – 93825 3895): Navynet MWS-TNE-EDITOR, Internet – mws-tne-editor@fleetfost.mod.uk
• All enquiries concerning distribution should be addressed to: Ministry of Defence, Forms & Pubs Commodity Management, Building C16, C Site, Lower Arncott, Bicester, OXON, OX25 1LP, copy to the Editor.
• The contents do not necessarily bear the authority of the Ministry of Defence, may articulate personal views, and may bear privately owned rights.
Photographs:
The cover: Front – a "mole", part of the HMWHS; see article on Page 44 (upper photo – courtesy of Babcock Intec) and the aircraft destined to deploy weapons moved by the mole, the first British-owned Joint Combat Aircraft; see article on Page 15 (lower photo – courtesy of Lockheed Martin); Back – the ship from which the JCA will fly – two sections of HMS Queen Elizabeth inching together in the shipyard at Rosyth.
Acknowledgements to the Fleet Photographic Unit who supply most of the general photographs.
Other photos supplied by the authors or as credited.

Jump to Contents

The Naval Engineer

Editor's Corner

DIARY DATE

Make a note of the date for next year's CNEO's Conference and Dinner, to be held in HMS SULTAN on Thursday 14 March 2013

"*The Naval Engineer – oh yes, some good articles, but I don't always get to read a copy*" is something I hear from time to time. Perhaps I, and the contributing authors, should just sit back and take the accolades for a job well done. However, let's analyse that statement, and see what we can learn from it.

"*… <u>some</u> good articles …*" implies there are some not-so-good ones – or alternatively that there could be "*… lots of good articles …*" if only someone would write them.

"*… some <u>good articles</u> …*"; so the content gives the readers useful information, whether for personal or professional reasons.

"*… I don't <u>always</u> get to read a copy*"; so is the hard-copy distribution passing you by, or is reading TNE one of those "Didn't get round to it" activities we all mean to do but never quite seem to manage?

Some not-so-good articles? If you feel you know more about a topic than is covered in a TNE article, or have a different opinion to the one expressed by an author, there's always room for a follow-on contribution in a subsequent issue.

Lots of good articles? If there's something happening in your area of engineering, or "It happened to me" which would be of value or interest to others, then put pen to paper (fingers to keyboard). All I ask is that you spare a little of your time to write down issues that are really affecting your business. I'll pull it together with a few juicy illustrations and you will have made a positive and tangible contribution to improving the standard of naval engineering. All, I'm sure, suffer from overfull email In-boxes and ever increasing work commitments, yet some managed to spare the time to write an article – can you?

Hard-copy distribution passing you by? Either contact the Editor to get the dist changed – or read TNE online (RLI – see below – or, in an unclassified version, on the Internet).

Didn't get round to it? Think about how you allocate your working day – should you be able to fit in a bit of reading time to be better informed?

Thinking of writing for TNE? Deadline for articles or letters is Friday 26 October 2012.
This issue of The Naval Engineer is also available on the Intranet at *http://defenceintranet.diiweb.r.mil.uk/DefenceIntranet/Library/* (search for TNE)
A full index of The Naval Engineer, and of Review of Naval Engineering, and soft copies of recent back issues are available at: *http://cwd-r-web-001.cwd.dii.r.mil.uk/mws_csg/publications/naval_engineering.html*.
Back issues of the Journal of Naval Engineering (JNE) can be found through the JNE Internet webpage: *http://www.jneweb.com/login.aspx*.

Jump to Contents

REGISTRATION ROAD SHOW

By Commander JJ Bailey BEng(Hons) MSc MA MIMarEST CEng RN Commander (E), HMS Ocean

On behalf of Chief Naval Engineer Officer (CNEO), and building on his theme of professional registration, Ocean hosted a Professional Engineering Institution Road Show on board whilst undertaking Op Olympic. Organised in conjunction with the General Service Engineering Requirements Managers and representatives from the training schools, the aim of the day was to educate personnel on the benefits of registration and promote membership. We also set out to raise awareness of the role that the institutions play in both civilian and military life, particularly to encourage and promote discussion amongst junior engineers.

Attended by over 140 personnel, the road show opened with addresses from both CNEO and Chief Naval Engineer Warrant Officer. They set out the arguments that underpinned the reasons for professional registration, and that it should be considered as a career-long commitment rather than just something that is enacted in the final years of service to support transition to civilian employment.

Following the opening address, five of the Engineering Institutions set out their unique selling points and gave an overview of the range of interests that they support. Neatly avoiding pitting each against the other to attract members, this allowed the audience to target questions on completion of the presentations when all personnel moved into the hangar and visited that stands that the Institutes had set up. In the RN's largest hangar the PEIs provided an informal road show-style setting for the Ship's Company to talk to representatives from the Institute of Engineering and Technology (IET), Institute of Marine Science, Engineering and Technology (IMarEST), Institution of Mechanical Engineers (IMechE), Society of Operations Engineers (SOE) and Royal Aeronautical Society (RAeS). Personnel were also able to ask questions on a personal level and find out what a membership would offer them as individuals.

CNEO and Michelle Richmond, IET's Director of Membership and Professional Development, sign a Special Registration Agreement

Whilst onboard, CNEO took the opportunity to sign a Special Registration Agreement with the IET. This will make it easier for sailors of all ranks and rates to gain IET membership at the appropriate level based on their military training and experience. It also grants engineers the ability to align their qualifications and professional skills with their civilian counterparts.

After the agreement was signed and the initial presentations completed, CNEO met members of Ocean's Marine, Air and Weapon Engineering departments and engineers from embarked squadrons, expanding the discussion on the benefits of joining and registering whilst still in service.

"*Events such as this one organised aboard HMS Ocean today provide the perfect opportunity for engineers of all branches and experience to*

Ocean's Engineers talk to representatives from the Professional Engineering Institutions

CNEO meets members of Ocean's Engineering departments

Jump to Contents

properly understand the benefits of professional registration and recognition." said Rear Admiral Lister. "*The Royal Navy has special agreements in place with these Institutions which enable Leading Hands to register as an Engineering Technician while Chief Petty Officers can register as Incorporated Engineers.*"

Benefits of professional registration include internationally-recognised certification that an Engineering Technician has reached a defined standard of professional knowledge, granting greater opportunities to RN personnel after they leave the Service. This recognition will help to raise the profile of professional naval engineers whilst serving, as well as aiding individuals considering leaving the service.

One of Ocean's LCVP maintainers, Leading Engineering Technician (Marine Engineering) Lakin, aged 30, said: "*Today's event was very informative and the opportunity to register as a professional engineer is a really exciting prospect*".

Nathalie Cameron, the IET's Armed Forces Development Manager, said: "*The idea of the visit is to encourage naval personnel – particularly Engineering branch Junior Rates – to take up membership in the institutions and gain formal recognition of the skills they have developed in the course of their military careers*.

It has also been a great opportunity to showcase the benefits of Institution membership, particularly for when sailors leave the Navy and wish to pursue an engineering career in civilian life."

During the event HMS Ocean was moored at Greenwich on the River Thames, where she was providing maritime support to the Paralympic Games as part of the London 2012 security plan. Her Commander (Engineering), JJ Bailey, said: "*It's a great opportunity whilst we are here in London to invite the engineering institutions to join us.*

Given the amount of training and experience that we have collectively gained in our operational service and throughout our careers, it's heartening to know that this is valued by the Service, our industrial partners and the wider engineering community."

Feedback from the event has been very positive. The Institutes have remarked that they have received a number of questions and contacts both during and after the event. On board, we have achieved the aim of raising the profile of the topic and putting it into the day to day discussion. Have we developed a wide understanding of the benefit of registration in service? Not yet, but we have encouraged people to think about it, and clearly there is more work that we should do with the institutes to develop the narrative that supports early registration. Was it relevant to all who attended? Yes, I think it was. We didn't limit the audience to just those who are eligible to join now by qualification but have sewn the seed with the most junior members of the team. I look forward to more interaction as we develop these themes.

PROFESSIONAL REGISTRATION OF RN TECHNICIANS

What follows is the text of a letter from CNEO to all Royal Naval Technicians dated 30 July 2012.

Ladies and Gentlemen,

It has now been over seven years since the introduction of the Air Engineering Technician and Engineering Technician and the concept is now embedded firmly as the core foundation of the Engineering Branch. With SDSR and redundancy now behind us, the future for Naval engineers and technicians is bright and the emphasis has now shifted to recruitment, retention and the development of ethos and professionalism. Engineering Technicians now represent 30% of the Naval Service and this is forecast to grow further in the future in order to support the next generation of ships, submarines and aircraft.

This reflects trends across the rest of UK society, where there is a growing recognition of the value and importance of technicians, especially since there is a forecasted need for the country to grow an additional 450,000 technicians by 2020. The newly formed Technician Council has recently launched the 'Professional Technician' programme aimed at raising the profile of technicians in the UK, increasing the pool of home grown technical skills and encouraging greater professionalism. The MOD has played a leading role in the development of the Professional Technician; recognition of the quality of our training and our people, but we need to continue to show leadership as we move forward.

On this theme, I would like to highlight the growing importance getting the RN's technicians, be they AE, SM or GS, professionally registered. The RN has special agreements in place with the Institution of Engineering and Technology (IET), the Institution of

Jump to Contents

Mechanical Engineers (IMechE), the Institute of Marine Engineering, Science and Technology (IMarEST) and the Society of Operations Engineers (SOE), enabling you to register as an EngTech from Leading Hand or as an IEng from Chief Petty Officer.

Registration is a clear demonstration that you have achieved a internationally recognised level of professionalism. I have recently written to all your engineering HoDs asking them to encourage registration within their teams and to start recognising the extra commitment and ambition that this shows when it comes to SJAR objectives and appraisals.

For further information relevant to your specialisations, points of contact are shown in the table below. Finally, if you are already registered, you need to ensure that it is recorded correctly within JPA as an engineering competence. Details on how to record the competence in JPA, as well as other useful information are available at the link.*

I strongly encourage you to get professionally registered; the benefits to you are considerable.

Yours Sincerely

* http://cwd-r-web-001.cwd.dii.r.mil.uk/CNEO/professional_registration_new.html

	WE (GS and SM)	ME (GS and SM)	AE
Email	MWS-SEMT-SONAR	SULTAN-TOME	FLEET-CAP AV EPP1 SO3
Phone	93825 2013 01329 332013	93843 6114 02392 546114	93832 5450 02392 625450

Letters to the Editor

Sir,

I recently read Lieutenant Hazelle Garton's excellent piece in the Summer 2012 edition of *The Naval Engineer* (*702 Naval Air Squadron Operational Conversion Phase: Embarkation in RFA Mounts Bay 20 February – 2 March 2012*). I think that Hazelle clearly, and logically, articulated the potential risks associated with flying from a platform not really configured for, and certainly not used to, operating a number of aircraft for a dedicated and extended period. I think her accent on the awareness of risk and the associated mitigating actions constantly surfaces throughout the report and it is obvious that a lot of effort was expended prior to the deployment.

There is one element missing from her account though; the presence of Maritime Aviation Support Force (MASF) personnel. The support offered by MASF's 13 personnel was the keystone in the bridge that enabled the activation of Mounts Bay's latent aviation capability in order to support 702 NAS. These key staff included a Met team, Aircraft Control support, a flight deck crew (seven in number), Survival Equipment support and logistical staff to augment the Mounts Bay crew.

By the provision of such tailored groups of versatile and agile teams, MASF, quietly operating behind the scenes, provides the essential support that goes a significant way to ensuring that deployments to unfamiliar platforms are eased and made all the more safer. It is worth noting that my team joined the day prior to 702's embarkation and disembarked the day after the squadron left. And many were then rapidly deployed to platforms and locations elsewhere in support of aviation. Another aspect that wasn't really covered was the relationship between the Flight and the Royal Fleet Auxiliary crew. That this appeared to go smoothly highlights the utility and professionalism of our sister service.

So in answer to Lieutenant Garton's question as to whether 702's 'can do' attitude was correct for this embarkation, the answer has to be a resounding yes. This answer can be supported by the thorough planning, risk analysis and mitigation carried out by Hazelle and her team. However, a vital portion of the success has to be accorded to the actions of the 13 person MASF team. As our motto states, *auxilio ad alta*[1].

Regards,

Lieutenant Commander Nat Gillett RN
Commanding Officer
Maritime Aviation Support Force

1. Reaching The Heights With Help.

Jump to Contents

UNLIKELY HEROES AND OTHER MILITARY ODDITIES?

A SYNOPSIS OF NAVAL ENGINEERS SERVING ON CURRENT OPERATIONS

By Commander Tim Woods MA MPhil RN
TM Career Manager

Joining as a University Cadet Entrant Warfare Officer in 1988 and reading Natural Sciences at Cambridge, Tim Woods has served in a variety of rewarding assignments that have exposed him to a broad range of RN, Tri-Service and NATO issues. With experience in both ships and submarines, recent appointments include Military Assistant to COS to CinCFleet and the FOST Submarine Capability Manager. He completed ACSC in 2003 and returned to Cambridge to study for an MPhil in International Relations on selection to Commander in 2007. Prior to his current appointment as a Career Manager, he worked in the MOD in the Above Water Capability area during SDSR and three Planning Rounds, latterly as Programmer of the £17Bn surface ship Equipment Plan.

At the outset of introducing armed upper deck sentries in the early 90s, there was considerable consternation by scornful Royal Marines about the danger of matelots being let loose with guns and the imminent end to life as we knew it, with an exponential rise in the number of NDs and blue-on-blue Grand Auto Theftesque fights; mercifully, this has not materialised. A modern day equivalent of Engineer officers acting as operators and directing elements of warfighting has thus far escaped any similar outpouring of apocalyptic ire from the 'ringbolt kicker' community of Warfare Officers. And rightly so – the E fraternity is delivering most impressively in dusty climes and has been doing so since the events of 2001. Previously, the acronym ME meant only one thing to Engineers. Now, Engineer Officers are holding down some very high profile posts across the world, many supporting the Defence Main Effort. This is not just limited to the more traditional roles of aircraft maintenance, comms support, base hotel services or logistics, but encompasses the demi-god realm of J3 activity, an area fiercely protected by the 'teeth arms' and one normally only occupied by RN Engineers during an ACSC Wargame.

Perhaps it is some kind of bizarre Personnel Control Experiment dreamed up in the bowels of West Battery to see if Engineers can hold their own in the high octane world normally associated with the Master Race. Someone is even allowing TMs to brief COMISAF on novel ways to curb insurgent activity, with further rumours of allowing 'chalk bosuns' to assist in the Horn of Africa and Op Atalanta type activities. Unsubstantiated reports are emerging of 'Balhetchet of Kabul' being employed against Taliban strongholds, where the white noise of this sinister psyops 'weapon' is allegedly making a difference. Whether this is turning the tide or just curdling the milk is uncertain, but he and others are achieving notable success in Afghanistan.

Another AE relished the opportunity to serve in a Provincial Reconstruction Team based in Lashkar Gah, with diverse duties ranging from discussing compensation with local elders and debating land rights for displaced people with local government representatives through to helping Afghan policewomen with basic weapon skills – all an incredibly long way from Squadron engineering, but with comparable challenge. She was able to draw a number of parallels on how to succeed in this unfamiliar and harsh environment with that of her previous core employment; invariably operational planning would require consultation with SMEs (this time from the Department for International Development rather than Trade CPOs) to identify key individuals (local elders rather than AETs) and resources (textbooks and radio programmes instead of oleos and rotor blades) to deliver effect (a public meeting or basic schooling as opposed to replacing an engine) to meet an operational plan (instead of the flying programme). One final marked comparison has been of immense benefit in her subsequent appointment, namely the spooky similarity between the skills necessary to negotiate with dubious Afghan government officials and those required in the DE&S to engage major defence contractors!

While Herrick is rightly the ME[1] and has seen numerous Engineer augmentees to date in a variety of conventional and now more command-centric roles, the Rest of the World Op Tour plot contains a scattering of officers from different engineering backgrounds. Exchanging overalls for CS95 and pith helmets, these officers are called upon regularly to innovate, think laterally and juggle a number of concurrent tactical tasks, proving that the spirit of the 'Great Egg Race' is alive and well within the Royal Navy. Certainly, the ship-driving, 'Zippo' war cries and kinetic effect remain the preserve of the dabbers and Royal, but increasingly more of the decision making, cueing of forces and analysis of operational effect is falling to Engineers.

This is perhaps best exemplified in the world of counter-piracy, where the plans for a bit of RDP for an E officer in the final stages of a

1. "Main Effort", not "Marine Engineering"!

Jump to Contents

six-month tour to Tanzania were rudely undermined by some of those pesky pirates. Informed by a security company of the presence of a suspect dhow, a previously pirated fishing boat, and the fact that a yacht in an adjacent stretch of ocean was now 48 hours overdue, our swashbuckling SO1 jumped into action, only to realise that there were no real assets to call upon. Undeterred, he assembled his own 'Beazer Homes League' multinational task force comprising a landing craft from a local nation, a support ship from an African navy and a civilian pollution control aircraft. Denied a state-of-the-art JOC and without access to even the most rudimentary N6, he dispersed his gallant force using the Heath Robinson C2 and Info Management of civilian email, SMS and Google Earth, learning to type with his elbows while fielding calls in each ear from the Atalanta chapter, who had woken up to the situation. The pirate MOSHIP was tracked down promptly and the crew seized, along with the recovery of six fishermen. The next challenge for our venerable hero was how to repatriate the hostages, while obtaining statements of their ordeal, something that they had refused to furnish up to that point. To cut a long and somewhat emotional story short, he was again successful in this task, securing the help of local immigration officials, the Sri Lankan High Commission and a conveniently passing Buddhist monk to act as translator. In sum, a very satisfactory conclusion to what could have been an egregious and embarrassing political situation, all achieved by a mix of enterprise, audacity, decisiveness and artistic license.

Such fleet-of-foot thinking is not new, evinced after a Royal Marine and MESM going umbongo down in the Congo were taken hostage while on patrol. The Bootie, irked at being imprisoned by the locals, decided that he had had quite enough and cut through the incarcerating tent with his knife and remarked. "I'm off …" The quick-witted 'bin bag', who until then had been comforting himself by thoughts of his rod control, decided in a heart beat that this COA met both his 1-up and 2-up's intent and would perhaps unlock the enemy's 'centre of gravity', immediately setting off in hot pursuit of his colleague. Both were commended for their efforts.

Of course, the Engineer has always possessed the knack of checking out the problem for himself and been able to furnish Command with a more accurate and first-hand assessment of the tactical situation. This is highlighted wonderfully by the tale of a Marine Engineer serving in a busy multinational staff in the Middle East, who upset the Int aficionados when he challenged their 'pirate under every bed', 'Captain Hook' paranoia and over-reliance on third-party information. After being brushed aside by the J2 ninjas and told that he simply did not appreciate the delicate nature of the problem or the disposition of the swarms of pirates, our intrepid Peter Pan left the compound and strolled down to a Danish ship that was holding some captured pirates, had a good natter to them and came back to the operational HQ with the interview data. He then presented his findings at the Commander's Daily O Group to be greeted by the weeping and gnashing of teeth from the Head of J2. It would seem that the custom of going down to the engine room and looking at it oneself has wider operational utility and is very applicable to the 'second-stage career'.

Eric Grove describes the difference between Army Officers and Naval Officers as having provenance from the Civil War where, with the memory of a primarily Army-implemented coup still very fresh in the mind, the Army was encouraged to draw from those who had a stake in the status quo (ie the landed gentry) for its Officer class. Ships, being extremely expensive, necessitated a meritocracy. The technology inherent to such platforms and the implicit risk that, if the ship sinks, both Warfare and Engineer sink together, means that the Es have thrived in this meritocracy, which has always placed them at the heart of the fight alongside their warfare brethren. In effect, Engineers have always been involved in warfare in the RN, where the diversity of our teams at the maritime frontline is fundamental to our adaptability and, therefore, our success in the 'come as you are' activity known as operations. The salient point is that, with no maritime equivalent to Combat Service Support, pussers, engineers and warfare have always coexisted and cooperated on the gun line. This is now true in a number of posts in the land environment.

Nevertheless, how long the grey squirrels of the perennially ascendant X world will continue to allow the red squirrels of the E community to participate in the sharper end of operations is uncertain. What is clear, however, is the palpable success that Engineers are having and the remarkable anecdotes returning with them from the most unlikely of conflict zones, finding themselves in a variety of challenging hotspots and delivering

... a variety of challenging hotspots ...

effectively in roles hitherto deemed 'verboten' for Engineers. Whether it is senior officers in ISAF having their groupthink challenged and 'chest-poked' by stout AE officers or WE Captains being cited by the 4* for being indicative of why there is 'Royal' in Royal Navy, there is clearly a burgeoning role that is establishing a level of current military experience in the E community comparable to those in other specialisations. Hopefully, this will continue … interested in volunteering to be part of this impressive cadre and gaining unique operational insight? Then contact your nearest Career Manager now; NPT(E) needs you!

Ed's Comment – see also the article on Page 12 of this issue

Jump to Contents

THE USE OF AGENT BASED MODELLING WITHIN DEFENCE

By Lieutenant Roxane Heaton MEng RN
SO3 Media, Training Based Technology Unit

Lieutenant Roxane Heaton joined the RN in 2006 as an E(TM) with an MEng in Aeronautical Engineering, after a short career as an analyst for an investment bank. She has taught at RNSME, served as an ADC to the Defence Attaché in Baghdad; completed a deployable Naval Education and Training Service appointment and has recently submitted her thesis towards an MSc in Defence Simulation and Modelling at the Defence Academy. She has just been selected for funding for a part time PhD to pursue academic studies in the field of Simulation for the RN.

INTRODUCTION

Modelling and Simulation (M&S) can be, and is, used in a wide range of Defence applications including acquisition, training, manpower planning, the development of doctrine and support to operational planning.

Modelling is used as a fundamental technique for exploring behaviours and to allow further analysis and optimisation of systems and scenarios across a wide range of defence uses from training to policy.

SDSR 9.2 recommended a reduction in live training by 25% by 2015 with a further reduction of 25% of residual live training by 2020. Simulation could assist in this in its ability to further enhance critical decision making and situational awareness.

This article will introduce one aspect of M&S: Agent Based Modelling (ABM), its methodology and the benefits which its use could bring to the RN and Defence.

BACKGROUND

Lanchester's Equations (LEs) model attrition in modern warfare. Lanchester theorised that one side's attrition rate is proportional to the opposition's size of force. Although a sound model for extension, LEs has two key limitations: firstly, its inability to account for any spatial variation in the forces and secondly that they do not incorporate the human factor in combat. Using ABM, the LE limitations can be explored and reduced. In this way, the system is modelled as a collection of agents who each use autonomous decision-making properties, based on a set of rules, to execute a scenario. The use of ABM has many emergent behavioural properties which have already benefited not only Defence, but, as a few examples, hospital and economic planning, disaster response and Computer Generated Imagery, seen for example in the battle scenes of *The Lord of the Rings* trilogy as in Figure 1, or the animated productions of *A Bug's Life* and *Antz*.

Traditionally mathematical models, including statistical models and the use of game theory, would be used to allow for any stochastic nature within scenarios. Another method to establish the change of nature of a model for a variable with respect to time would be the use of Ordinary Differential Equations (ODEs). This latter method has produced great steps forward in the understanding of modelling of scenarios but still adopts a top-down, macro level approach. In order to specifically consider the importance of the

Figure 1: Crowd modelling in "The Lord of the Rings" (Jackson, 2003)

Jump to Contents

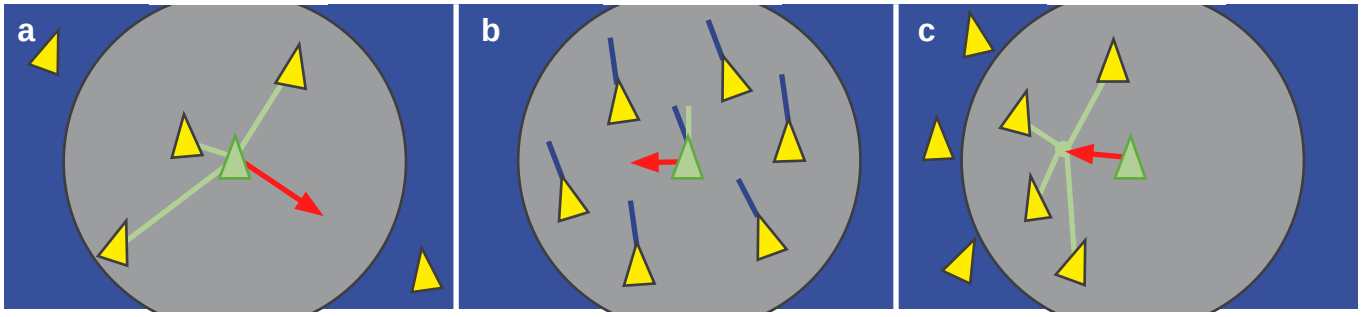

Figure 2: a: Separation b. Alignment and c. Cohesion – where the red arrow shows the direction of movement of the individual entity in relation to the other blue entities (Reynolds, 1999)

interrelations and interactions between entities (agents) which produce nonlinear complex dynamic systems; a bottom-up, micro level approach needs to be taken.

ODEs and Matrix modelling have previously been used to study biological processes (for example the optimal delivery of chemotherapy to sufferers from the Human Immunodeficiency Virus) and also for egress modelling. There are also many systems that can be approximated to ODEs which can then be analysed and interpreted over time, for example population growth, depletion of natural resources, financial modelling and genocide. ODEs, although not perfect predictors of real world scenarios, provide an insight into the scope of the problem and a means to quantitatively compare results of other, further developed, models to ascertain their baseline viability.

WHY USE ABM?

ABM describes a system from the perspective of its constituent units: the agents, their relationships with other agents and their environment. These agents are autonomous and have a defined set of rules for their behaviour and interactions with other agents. Relationships define with whom and how agents interact and the agent's environment describes how agents interact with the environment around them. Even when the rules defining agents are relatively simple, complex interactions producing the collective outcome can uncover surprising and unexpected results.

Repeated running of the model can produce emergent properties of the system being emulated which can provide insight into real world situations. To do this, greater computational power is needed than for previously discussed mathematical methods, which nowadays is not necessarily a problem. These emergent properties make the use of ABM so appealing and drives further usage of ABM on its own or as a hybrid model.

A complex field to model and explore is the effect of non-combatants on military operations. It has been recognised that non-combatants have influence on policy considerations and that their improved representation could better prepare troops in training and C2 awareness for urban operations. However, the modelling of human behaviour as an individual and a crowd is challenging: it has been noted that "people do not follow the laws of physics; they have a choice in their direction, have no conservation of momentum and can stop and start at will." (Still, 2000)

One example for human behaviour is the emergent behaviour during the egress of individuals to or from situations (for example non-combatants after a suicide attack). Herding behaviour is exhibited, which can be irrational (fight or flight) and can lead to uncontrollable dangerous results (for example when transiting through a constriction, such as crossing over a bridge). An example of herding behaviour which is routinely demonstrated by flocking birds and can be directly applied to ABM for humans can be seen in Figure 2.

EXAMPLE ABMs

A simple model with one exit was developed by Helbing et al. (Helbing & Farkas, 2000) In this ABM, 200 people were modelled as a crowd leaving through this exit. It was found that after 45 seconds, 44 people escaped and 5 were injured as in Figure 3a. A column was then put between the crowd and the exit, which after the same period of 45 seconds modelled 72 people escaping with no injuries as in Figure 3b. It was shown that the column regulated the flow and also sped up the flow rate. Therefore the optimum outcome after these tests was to put a column in front of the emergency exit; however, this would be counter-intuitive in an initial design, but through the use of ABM this benefit was identified.

Further interesting ABMs which have been used to further demonstrate steering behaviours can be seen in Figure 4 overleaf.

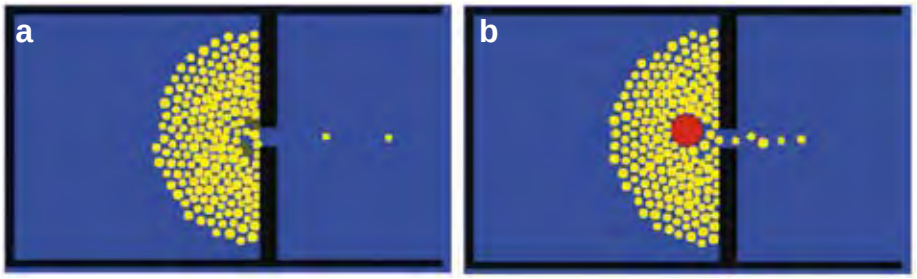

Figure 3: Simple Exit Model a. with no column b. with column. (Helbing & Farkas, 2000)

Jump to Contents

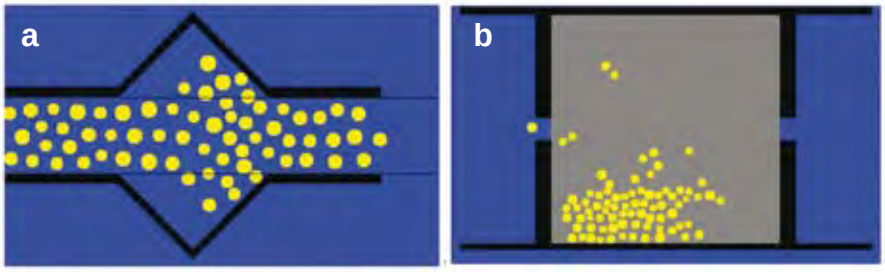

Figure 4: a. Effect of a divergence on a corridor. b. Effect of herding in a smoke filled room. (Helbing & Farkas, 2000)

Effect of a divergence on an emergency exit/corridor.

Figure 4a shows the effect of crowding at a convergence on the corridor after introducing more space along the route. A straight corridor would regulate the speed of all entities, however introducing a non-uniform increased area in movement alters this flow and could cause incidents as in Figure 4a.

Effect of herding in a smoke filled room.

A pictorial consideration of one benefit of photo luminescent emergency exit arrows is the herding behaviour shown in Figure 4b. The image shows the average of many runs of one ABM demonstrating the chances of escape by entities from a smoke filled room. The majority of entities herd in a direction which one may take, which by probability is not the exit.

ABM IN DEFENCE

Computer Generated Forces (CGF) are computer representations of entities in simulations which attempt to model human behaviour sufficiently so that the forces will take some actions automatically (without requiring human-in-the-loop interaction). CGF can be used as a way to reduce manpower requirements for large-scale exercises or to add rigour to decision-making in the planning of such exercises. These models also help test operational planning, influence force structure decisions, help determine equipment acquisition and the use of weaponry and explore optimum doctrine or tactics.

Inbuilt CGF within Virtual Battlespace 2 (VBS2 – the serious games engine for which the UK MOD already has an enterprise license), do not have a high level of realism of behaviour as they are largely limited to path finding or the triggering of simple scripts in response to events. However, in training for the Contemporary Operating Environment (COE), it is essential that Intelligent Agents (IAs) are used which exhibit more realistic behaviour. Modelling within ABM fulfils this necessity and can now be included in the scripting for IAs within VBS2 as in Figure 5.

IA entities are bounded by a set of Belief-Desire-Intention statements which aim to target the previously difficult field of modelling human decision-making, albeit are more computationally expensive. With the COE requiring coalition forces to be trained to work with and against multi-role forces, more realistic training environments are sought as an alternative to high cost live exercises. It is therefore important that these synthetic environments more accurately model human behaviour, in particular team behaviour, otherwise trainees may look to predict a simulator's response rather than achieve the training objective.

Modular Semi-Automated Forces (ModSAF) was developed by the US Defense Advanced Research Projects Agency to enable realistic CGFs to be used for training, test and evaluation on a virtual battlefield interacting with real life entities. ModSAF can be used in M&S applications using selected fidelity to prioritise cost, performance and realistic simulation (www.onesaf.org).

Variants have been developed from the original ModSAF model, exploiting the flexibility and adaptability of ABM.
One such variant, Joint Semi Automated Forces, has recently supported decision-making into experimentation into the effects of weather, dynamic terrain and Chemical Biological Radiological Nuclear modelling and C2 strategic planning.

Additional examples of where CGF and IA have been used in practice in support of military operations are studies into how unmanned surface vehicles can be used in force protection mission, the impact of degraded communications on operations and also used in the modelling of piracy operations in order to increase insurgent

Figure 5: Scenes with IAs in VBS2 (Simulations, 2012)

Jump to Contents

detection and reduce their threat to maritime safety. (Esher, Hall, Reginer, Sachez, Hansen, & Singham, 2010)

BENEFITS OF ABM

ABM can explore the periphery of previously unexplainable behaviour for systems, which can develop new theories and expand existing ones. The use of computer programming uses a modular approach, which adds to the flexibility and adaptability of the model for further use, unlike mathematical approaches.

ABM provides an autonomous, natural description of a system. Agents are interdependent and produce heuristic results. An example of this is the modelling of human beings, all following different interpretations of a rule based on an individual's understanding and beliefs. This more accurately reflects the real world system. The stochastic nature of human beings, and other agents, are able to be modelled more effectively using ABM as opposed to adding an arbitrary noise term into an ODE to induce a margin of error in the results.

ABM also adds a new dimension to combat system simulation by allowing users to directly represent individual battlefield entities and their interactions as with the IAs used in VBS2.

CHALLENGES IN THE USE OF ABM

An ABM is built to serve a particular purpose; a general purpose model cannot be built to be applied to all scenarios. Therefore new models or modifications to models must be made to ensure that the ABM is fit for purpose for the requirements and processing power. The required application of the simulation must be paramount in consideration when building the underlying models, and this requires expertise, to ensure that the results will be suitable for their intended further use, be they qualitative or quantitative.

Although stochastic properties can emulate some human behaviour aspects, the complex behaviour across demographics and cultures can never currently be completely accurately represented using ABM. This must be a consideration when analysing the results, however the marked improvement in modelling from the times of computational modelling is still a trade-off in favour of the continued use of ABM.

Although the level of processing power in general is not a limitation, large ABM simulations still could require much computational processing and this can be time and computationally draining, considering that all constituent entities must be modelled individually. This may or may not be possible for the required objective depending on time and cost limitations imposed.

Due to the sometimes unexpected behaviour produced when running ABM, results can be interpreted incorrectly if the model is not fully understood. This is known as explanatory opacity, meaning that the results may not be obvious, and effort must be expended in considering and explaining the results before feeding these back into existing theories.

SUMMARY

M&S is used routinely across industry to more accurately predict potential trends and plan accordingly. ABM has evidentially proven both temporal and financial savings across domains such as production, manufacturing, logistic modelling, telecommunications, healthcare, the financial sector and the energy market. These savings are due to the dynamic, interactive relationships of underlying agents within an ABM which can be rapidly assimilated and applied to real world situations.

For some Defence purposes, low dimensional differential equations may still be ideal for the scenario in question, however consideration of how and why developments in the field of ABM have been considered here.

ABM is clearly a powerful tool when required to analyse autonomous agents who have bounded information in a spatially distributed system. ABM also allows for the sensitivity testing of theories in a safe environment and allows for emergent behaviours to be explored.

Although ABM has significant pedagogical value, it must also be realised that there are advancements still to be made, potentially in the hybrid modelling field considering Systems Dynamics alongside ABM.

Consideration has been made here to just one example use of M&S to potentially provide opportunities to enhance training and also strategic and situational awareness across the RN and Defence, however further evidential benefits should be explored and appreciated for its broader acceptance and application.

GLOSSARY OF TERMS

ABM	Agent Based Modelling
CGF	Computer Generated Forces
COE	Contemporary Operating Environment
IA	Intelligent Agent
LEs	Lanchester's Equations
M&S	Modelling and Simulation
ModSAF	Modular Semi-Automated Forces
ODE	Ordinary Differential Equation
VBS2	Virtual Battlespace 2

REFERENCES

Esher, L., Hall, S., Reginer, E., Sachez, P., Hansen, J., & Singham, D. (2010). *Simulating Pirate Behavior to Exploit Environmental Information*. Winter Simulation Conference. IEEE.

Helbing, D., & Farkas, I. & Vicsek, T. *Simulating dynamical features of escape panic*. Nature (2000). (London), 487-490.

Jackson, P. (Director). (2003). *The Lord of The Rings* [Motion Picture].

Reynolds, C. (1999). *Steering behaviors for autonomous characters*. Game Developers Conference.

Simulations, B. I. (2012, Jun). VBS2. Retrieved 18 July 2012, from BIS: http://products.bisimulations.com/

Still, G. (2000). *Crowd Dynamics*. University of Warwick: PhD Thesis.

www.onesaf.org. (n.d.).

Jump to Contents

TIME TO SERVE

Commander Andy Ewen BEng MSc (GW) MA CEng MRAeS MIET RN
Commander (Air Engineering), Royal Naval Air Station Culdrose

Andy joined the Royal Navy as a Weapon Engineer before gaining a commission in 1988. After graduating with a First in Aeronautical Engineering from the Royal Naval Engineering College, he led an inaugural exchange with the QE2 on the Pacific leg of her World Cruise before serving in HMS Tamar in Hong Kong. He has served as DAEO in 849 HQ and deployed as AEO 849 B Flight for operations in the Adriatic. In 1997 he was appointed to the CVF IPT where he led the capture of aviation requirements within the combat system. As a Lieutenant Commander he returned to RNAS Culdrose to be AEO 824 A Flight as Merlin aircraft entered service. After graduating from the Advanced Staff Course, he became the Senior Air Engineer responsible for the operational fleet planning for all Merlin, Sea King, Jetstream and Hawk aircraft. In February 2005 Andy was appointed to PJHQ J5 in Northwood with responsibility for contingency planning for the overseas bases in Gibraltar and Diego Garcia. On promotion to Commander in March 2006 he went to MOD Main Building as the capability sponsor for maritime aviation in DEC AWE. He was seconded to KPMG in 2007 to lead the implementation of Through Life Capability Management across Main Building and, in August 2008, he was appointed to the Pentagon, Washington DC to promote Joint Interoperability through the 3* Interoperability Commission and advance Systems Engineering within the DoD. On return to the UK in August 2011, he spent a short time at the RN Release to Service Authority before moving back to Culdrose to become Commander (AE) in February 2012.

"*Good luck in Cornwall, and with all those SDs*[1] *too!*" Those words, or similar, greeted me on several occasions before taking up my current assignment heading up the engineering effort at Royal Naval Air Station (RNAS) Culdrose. The words seemed so supportive and positive, almost innocent – but what did they really mean about "*… all those SDs*"? As Commander Air Engineering, I am supported by three key Senior Engineers leading the engineering effort to the Merlin Force, the Sea King Force and multiple support organisations respectively. By circumstance rather than design, all three incumbents are Senior Upper Yardman (SUY). So what? Perhaps in the absence of facts, myths will fester and the perception may have been that SUYs, having profited from a long career path, may be wedded to the past, resistant to change, and harbour a reluctance to innovate. If this were so then I had a problem.

RNAS Culdrose cannot afford to stand still. The Merlin HM Mk1 is currently in the dynamic phase of transitioning to the Mk2; the engineering training school is readying to support the Merlin Mk3 that is transitioning from the RAF to RN service; the venerable Sea King Mk5 Search and Rescue Force and Mk7 Airborne Surveillance and Control Force are commencing the final phase to out of service in 2016; the Avenger twin prop aircraft has just entered service to deliver Observer training; and the Hawk T1 trainer is still flying low and fast over ships conducting sea training in Plymouth. In policy terms the Fleet Air Arm couldn't be going through a bigger transformation in how military aircraft are regulated and how airworthiness is assured. All cerebral stuff requiring new thinking, new approaches to old problems and key leadership to bring a large community of engineers and support staff along safely. Oh, and of course whilst simultaneously supporting deployed squadrons and ship's aviation services[2] in theatres around the world and in stations around the country. Seniors reluctant to lead this change would fail from the off. So do I have a problem to report?

Three months later those tired old perceptions of SUYs could not have been further from the truth, but then that is the thing with perceptions: they do not need the truth to be sustained but they can be challenged by it. But this is not to be an academic critique of personnel strategy and policy, I intend to dispense with this perspective of SUYs by merely presenting the three Senior Engineers I have the great pleasure to work with at RNAS Culdrose. They have almost a century of service between them, and what unique, dynamic and challenging roads they've travelled in the service of their country. It would take a book to capture their stories and successes in full, so herewith just one aspect of their service to provide a glimpse of their true character.

So rather than take my word, as so often in our senior meetings, I shall let them do the talking:

Lieutenant Commander Dale Collins MSc(Eng) IEng MRAeS RN

Dale on the Afghan/Pakistan Border

Dale is currently Senior Support Engineer at RNAS Culdrose. Immediately prior to this he was the RTM322 Group Leader, Helicopter Engines Project Team and before that an Operations/Planning Officer with ISAF. Here he describes his experiences with ISAF in an environment far removed from the usual stomping grounds of AEOs.

1 SD stands for Special Duties (List) and was the former term for a Senior Upper Yardman (SUY).

2 I also lead the Maritime Aviation Support Force – which delivers everything from Naval Aircraft Handlers to Phalanx support teams and stewards to the aviation capable ships including RFAs.

Jump to Contents

"SUY – JACK OF ALL, MASTER OF …….. SOME?"

Thirty one years ago life was pretty simple, I loved doing the cab wipes! I felt a sense of ownership and pride as a Plane Captain when my Sea King Mk5 went up onto the lift and on to the deck of HMS Invincible ready for flying. I was a Junior Air Engineering Mechanic 2nd Class (remember those?), it was the height of the Cold War ('Ripple' flying and the Soviet Navy on the horizon sifting through our gash) and thirty one years later I didn't think I would be sat here as the Senior Support Engineer writing this. What is 'this'?. Well I suppose it's a reflection on a particular part of my life as a SUY AEO.

I am a great believer in that, if you are willing to work hard, listen and learn, then the Service will provide you with opportunities to fulfil your ambitions. I had completed nineteen years in the Sea King environment, from Mechanic to Artificer, from Leading Hand to Charge Chief Petty Officer (WO2), before deciding to take the plunge and complete the SUY Qualifying Professional Exam (SUY QPE) and the Admiralty Interview Board. I have since completed 12 years as an Air Engineer Officer, predominantly in the Merlin Mk1 and Project Team environments.

So what? Well, my career probably reflects many other Special Duties (SDs, remember those?) and SUY Officers currently serving. Once BRNC, the Systems Engineering Management Course and Certificate of Competence were complete, it was the excitement of getting to my first squadron, 814 NAS Merlin Mk1 in my case, let loose as the Assistant and then Deputy Air Engineer Officer. From there I completed appointments as Engineering Training Officer, Project Officer in the then Defence Procurement Agency MOD Abbey Wood, AEO of 700M Naval Air Squadron and RTM322 Group Leader with the Helicopter Engines Project Team.

The greatest challenge in my career as an SUY, however, has been an assignment with the International Security Assistance Force (ISAF) in Afghanistan as a Planning/Intelligence Officer in 2008/09. Together with the hard work, I have been an advocate of stepping outside your comfort zone. Embedded in the Tripartite Joint Intelligence Operations Cell with Afghan and Pakistani officers, my primary task was to assist a Colonel in the Afghan National Army (ANA) and his staff to improve Border Security in Regional Command (East). No easy task and made even harder when the relationship between the ANA, Pakistan Army and ISAF was fragile at best.

Meetings in Pakistan with the Frontier Corps

The Afghan-Pakistan border (Durand Line) is some 2,700km long, stretching from the Hindu Kush in the northeast past the Helmand-Baluchistan interface to Iran in the west. It's a challenging environment. The border area between Afghanistan and Pakistan has long been one of the most dangerous places in the world, due largely to very little government control. It is legal and common in the region to carry guns and assault rifles, and explosives are common. The border is porous due largely due to accessibility and many forms of illegal activities take place such as smuggling of weapons and narcotics. While, most of the time,

Characters in the Border Posts

Jump to Contents

Travelling by Road not Desirable

the Taliban cross the Durand Line from Pakistan into Afghanistan and carry out attacks inside Afghan cities, sometimes they cross from the Afghan side of the border and attack Pakistani security forces. None of this is helped by the fact that the border is not recognized as that in many villages let alone by the Governments involved. There is much dispute along its length as to where it actually lies.

As an Individual Augmentee in the ISAF working for the ANA and Pakistan Army, my portfolio was diverse. Providing a daily intelligence brief of military activity on the border, facilitating border security meetings with Senior Officers at the Border Coordination Centre, Torkham Gate (Khyber Pass to the Brits), improving the capability of the Afghan Border Police through improved communications and training, mapping of the border and Border Posts and improving communications on Counter Improvised Explosive Device initiatives where just a few of the tasks I was involved with. Any training for the above? Well these tasks were obviously in no way connected to Air Engineering or the duties of an AEO but I certainly thought I had just completed a 27-year training course to enable me to carry out, contribute and integrate into this strange world.

Travelling by Chinook Much More Preferable

Communication is key, no matter what your role. Despite the fact that there was a diverse range of languages and dialects spoken by all (including myself, I often wonder whether my Afghan Colonel is talking like Sean Bean!) we always managed to be able to make ourselves understood, even if through interpreters. Despite a fragile relationship between some the key stakeholders, meetings were conducted with courtesy, respect and good humour. Managing my own expectations was also key. I arrived in Theatre, like I have approached every assignment – wanting to change the world for the better, immediately! The problem is the world has got to want to change with you. If on a daily basis at least some progress, a small step in the right direction, was made, that really was a good thing.

I am hoping my past career, training and experience as an SUY added some value. I know I thoroughly enjoyed my experience, if indeed a little scary at times but I met some wonderfully interesting people. Part of the thought process of deciding to change my career path was to step off the well trodden, manicured path and challenge myself. I didn't want to follow the traditional SD path either (which for some has been to return to the past comfort zone, only as an Officer). We all have a comfort zone where we feel safe, warm and dry. But every now and then we need to step outside and be challenged, be frightened, be stimulated. This doesn't have to be putting yourself in harm's way. It may be a new aircraft, a project or challenge outside the AE specialization. I believe as SUYs we, as a community, have put a lot of restrictions on ourselves that have limited us. Taking the challenge of expanding our SUY comfort zone keeps us learning, growing and adding value to the AE Officer cadre. You can't grow mould if you keep growing – so keep learning.

Jump to Contents

Steve Fuller at the observatory in Palma, Majorca

Lieutenant Commander Steve Fuller BSc(Hons) CEng CPhys MInstP RN

Steve is the Senior Aircraft Engineer for the Sea King Mk5 and Mk7 Force. Despite what may appear a traditional career path to date, he is also a member of the Institute of Physics and is involved with activities aimed at promoting the opportunities provided by a career in maths, physics and engineering. His piece describes this activity and the role of those involved with the professional institutions in promoting engineering as a worthwhile career. Not at all traditional.

"SUY, PROOF THAT THE JOURNEY IS MORE IMPORTANT THAN THE DESTINATION?"

The universe is a beautiful chaotic masterpiece; enigmatic, elusive and largely cold nothingness. Yet within this disorder are hierarchies of order teasingly just beyond our grasp, strange attractors that manifest as tangible structure. You can observe vortices spilling off a bee's wing, as water floods down the sink, as a tornado or when matter is drawn towards a galactic black hole. However, as any wizened fluid-dynamicist will tell you as they cry softly into their pint, a fluid and nearly any other system beyond a basic Newtonian construct inextricably descends into unfathomable chaos. A physicist is a dreamer who foolishly believes that maths and reason can tame the untameable and that the raging beast that is our existence can be brought to heel. I am a physicist and probably always have been. However, when I left school the call of the sea was stronger than the call of dreaming spires so I joined the Royal Navy.

An early career as a Radio Trade Artificer in the FAA has been followed by broader engineering appointments as an Air Engineering Officer. As physics is largely applied maths, so engineering is largely applied physics and, apart from the normal ups and downs of Service life, I have always felt at home in the world of engineers and engineering. Around the time that the RN opened the door to the wider possibilities that the SUY route into the Officer cadre would bring, the national treasure that is the Open University facilitated a return to the joy of physics. The need to achieve Chartered status led me to the Institute of Physics who, alone, recognised my physics degree as appropriate and assisted me in achieving both CEng and Chartered Physicist (CPhys). The dynamic challenges of the RN would always constrain my ability to nudge the frontier of human knowledge forward so my contribution is at a somewhat lower level – though no less valuable. The Institute of Physics run a series of 'outreach' events that seek to bring the worlds of maths, physics and engineering to a younger generation. These events are given in a number of formats, including careers fairs, schools and university visits. The careers events are always rewarding although I am normally viewed with some suspicion by the Fire Brigade when my pickled-gherkin lamp (used to explain how a sodium street lamp works) sparks and smokes. At these events I am always astounded at how unaware people are of engineers and engineering. At one event a lad of about 16 told me that he was going to build aircraft but, when I said that if he fancied a career in engineering he should consider maths and physics at A-Level, he replied that he wasn't going to be an engineer, he was going to build aircraft!

Whilst in the RN, engineers enjoy a non-gendered meritocracy with respect to career progression and aspirations, it is evident that our schools and wider society have not yet fully made this transition. Many young women that talk to me have already been streamed into a traditional gender-stereotyped view of the world which limits the choices open to them. I wonder what it is that our schools do to turn the majority of girls off from the world of maths, science and engineering and just what impact this is having on our economy?

Another area of real concern is maths. Many young students that talk to me avoid the world of science and engineering because they are literally scared of the maths. I am regularly told that engineering would be an attractive career if it wasn't for the need to do more maths. Again it must be a failing in our wider education system when our youth limit their aspirations because maths is seen as too difficult or uninteresting. At these events, I have described a previous appointment as the Sea King Mechanical Engineering Authority as part CSI Sea King, which always seemed to strike a chord but I suspect that if I explained that the Project Team used statistical analysis to support Reliability Centred Maintenance it would have been much less interesting.

On the flip side it is invigorating when something catches the interest of those you are engaged with; whether an eight-year-old looking with amazement when they believe that their mind is causing a suspended Cartesian diver (pen lid) to rise and fall in a 5 litre plastic bottle (think submarine buoyancy), or a

Jump to Contents

group of 15-year-olds proving how GPS works with string and rulers, or 18-year-olds robustly arguing about whether quantum tunnelling is possible (objects going through walls – just because they can). It is riveting as it is rewarding to be given the opportunity to try and light a flame which may ignite the potential in a future star and I never fail to be amazed at how eager to learn young minds are. It is difficult to know whether there is any tangible benefit from conducting these events and whether they bring an extra stream of students into the world of science and engineering that wouldn't have taken that path anyway. However, they are great fun and I really felt that I had added some value when Plymouth University requested me personally for a careers-in-maths event because I had managed to have a noticeable effect the year before.

Does being a SUY Officer help me conduct these events? Not in the slightest; I am sure that any RN engineer (officer or rating) would have a great story to tell in order to illuminate the message. However, a 24-year training package, a transition into the officer cadre, coupled with achieving CEng and CPhys have all given me the belief in my own ability and credibility to be able to stand in front of a very demanding audience and tell them that a career in engineering, maths or science is interesting, rewarding and of value to the individual and wider society. For those associated with one of the professional institutions I would encourage you to get involved with your equivalent 'outreach' activities as they are very rewarding and do present an opportunity to give something back to engineering and to a career that undoubtedly has or will give much to you.

Lieutenant Commander Andy Leaver MBE RN

Andy is currently Senior Aircraft Engineer (Merlin) and in recognition of his service, leadership and technical knowledge in support of the Merlin community he has recently been awarded an MBE. His piece outlines his thoughts on leadership garnered from his own experiences.

"SUYs – ENGINEERS WHO KNOW WHERE TO TAP THE MACHINE?"

Writing an article on self achievement, post the award of an MBE, is not a exercise I enjoy – as what I have achieved to date is what I feel is expected of me and all that I serve alongside. Hence to be acknowledged for my technical and leadership ability feels wrong. Experience is not something marked with the receipt of a certificate or with a graduation, indeed it is something gained over a period of time. Some of this experience can be gained within a short period and you can physically recall the event. Other experiences are gained over protracted time and may be so subtle you are unaware of the effect. By careful career management (pure coincidence), on leaving the service next year I will have spent exactly 17 years as a rating and 17 years as an Air Engineering Officer and this combination of experiences has made me who I am.

Advancing from Junior Naval Air Mechanic to Charge Chief (Warrant Officer 2) exposed me to all levels of career, leadership and technical training, three years actually within the classroom and what seemed years studying for advancement examinations. Away from academia I spent the entirety of my rating's time within operational squadrons. For the first 10 years I was unknowingly working at reach, being exposed very early to high degrees of responsibility (I was authorised to change £250,000 engines but too young to have a Long Service Advance of Pay for my mortgage) and leading a workforce, many of whom may have resented my artificer status. Employment as a Flying Maintainer gave me a deeper appreciation of operational aspects of flight, especially vibration, engine diagnosis and the finer art of flying control interaction.

There are many types of leader; I am unsure where my style developed and whether it is from nature or nurture. However, regardless of whether my charges like my style, I would like to think I am consistent; I have admired several leaders, all of differing styles, but all have been predictably consistent. My technical ability is definitely derived from nature, I have been a budding engineer since I could crawl. This inbred desire to understand 'how does it work' coupled with a reasonably hard-working attitude has, and continues to, lead me to understand the true nuts and bolts of a problem. Gaining a commission having just been promoted to Charge Chief was timely as there was nothing left for me to explore within a squadron environment. Whilst I thought I knew what being an officer had to offer, I was naïve to the new experiences ahead. I discovered that nuts and bolts also need to be designed, produced, contracted and supported, and all of this activity needs money!

Two most enjoyable years within DE&S became my second apprenticeship. Exposure to commercial disciplines, Design Authority activity and finance was nearly as exciting as engineering. In my later years I now know this is as important as the actual turning of spanners. Furthermore, exposure to cultural differences was achieved during an appointment to a Lynx squadron supporting small ship flight operations. Whilst they wore the same uniform, had trained in the same system and operated under the same policy as my previous larger helicopter squadrons, operating from an alternative airfield 150 miles to the southwest, the culture was markedly different, both for better and worse. As an 'SD' officer I thought my career culminated with an appointment

Jump to Contents

as a charge AEO on a Merlin squadron but whilst it was hugely rewarding it was never the panacea as the all important 'Charge Job' it is perceived to be. Discussing my reported success whilst still in post, I described the job to my fellow General List peer group as easy, quoting that the system, people or processes just needed a tap in the right place to ensure they had the desired effect. 'It is only easy if you know where to tap' was their mutual response.

Having served a 31 year apprenticeship, I was duly appointed Senior Aircraft Engineer (Merlin) for my final three years of Service. The Merlin helicopter was commissioned into service whilst still under development; it has had two crashes whilst in service (and one during pre-production flying) and was plagued with technical and support issues. This was always going to be an airworthiness and leadership challenge, one which was nearly as daunting as having to take a handover from a Cambridge graduate! Due to the immaturity of the airframe and supporting repair manuals, the Merlin Helicopter Force had lost its ability to make assured airworthiness engineering decisions and had become heavily reliant on Westland Helicopters Ltd for process and, ultimately, mitigation. The vibration issues, which were the major contributory factor to one of the crashes, led to protracted groundings every time an airframe suffered abnormal vibration (helicopters vibrate!). Furthermore Westland Helicopters, rediscovering itself as an availability contractor, exposed its fragility as a repair and overall contractor as well as a provider of part spares. Having already been involved with Merlin for several years I was acutely aware of the vibration issues and the impact once the aircraft had reported vibration. In my desire to fully understand the issues and their consequences, I gleaned information through squadron engineers and aircrew, flight test and the Project Team. From these conversations I challenged the disparate understanding and, from the resulting Working Group, a major contributor to the grounding of aircraft, especially at a satellite airfield (which was a regular event), was resolved within a month.

Balancing airworthiness risk and operations is an art form, a discipline that all AEOs understand but take a lifetime to master. One of the most enjoyable roles of the Charge AEO and SAE(M) is constantly providing guidance and reassurance whilst applying due pressure to encourage decision making. The answers are rarely black and white, and the longer you are exposed to this discipline the broader the grey area becomes; there then becomes another balancing act between being risk adverse and being cavalier. Having being in and out of this discipline since being a CPO, I have gained a deep understanding of mitigation, stemming from what is acceptable on a case-by-case basis when actually doing a job, through mitigation on an aircraft by aircraft basis when deferring working and extending work packages, to mitigation of fleet-wide issues. Hence, in my current employment, when these airworthiness issues arrive, I have the experience to instinctively know how to carry risk. This deep understanding allows mentoring of all involved within the process. The greatest feeling of achievement is when I visit a squadron knowing, on arrival, that they are thinking 'he must be mad if he thinks we are going to fly with this fault!' Having explained the principle, failure modes and safety margins, I leave the unit where the initial sceptics have now cleared the aircraft for flight in the knowledge that they have made a justified and correct decision.

I am the first to acknowledge that with my education and background I do not have the same qualities as a graduate engineer, my perspective is deeper rooted towards problem solving, leadership and the here and now. I sense my weaknesses are within policy, strategic thinking and I can not converse about Shakespeare or Keats – but I can live with that. I have worked alongside some gifted graduate AEOs, several of whom have the potential for a most promising career. I would like to think that some of my SD qualities have rubbed off. My outlook on life is that from our first breath we mimic those around us and learn a lot about life through this osmosis effect. The strongest development tool we all possess is that of mentoring; all within your workforce should be a mentor and should be mentored. However, if you want to get the very best from your system, employ someone who knows where to tap it!

CONCLUSION

This article has challenged some of the tainted and tarnished perceptions that seem to linger in the wider community of engineers that ill serves our SUYs. Perceptions, of course, can be easily corrupted and not so readily corrected; "*What you see and hear depends a good deal on where you are standing; it also depends on what sort of person you are*"[1].

What I hope the accounts of the three Senior Engineers here at RNAS Culdrose have shown, with just a glimpse of their experiences, is that far from being constrained by having SUYs as seniors I marvel at their diverse backgrounds, outlooks and aspirations. There may well be characteristics common to SUYs, such as dedication to duty, determination to overcome problems, commitment to service; but these are not limited to SUYs, just as creativity, academic excellence or innovation of approach are not limited to our graduates. Just as you cannot bound with certainty the characteristics of an SUY – as I hope you now accept – so you cannot bound those of an UY or Graduate entry either. In the glorious mix of human nature and experience all these admirable qualities are open to all and the preserve of none. SUYs may have first been struck by the notion, '*time to serve*' and the limit of their career ambitions may be similarly constrained by their '*time to serve*', but don't bound them in any other way. You will almost certainly be doing them a disservice.

1 C.S. Lewis, *The Magician's Nephew*.

Jump to Contents

NAVAL ENGINEERING

Welcome to another edition of Lessons Identified. The authors are Lt Cdr Duncan McDonald (FLEET-CAP SS OSG SO2) (GS) and Lt Rob Heywood (FLEET-CAP SM E ASSUR SM SO3) (SM) to whom any immediate queries should be addressed.

The above named officers and Cdr Philip Parvin (SM) (FLEET-CAP SM E NPOS SO1) are the current Navy Command HQ sponsors for this series of articles who welcome feedback or material for future editions of Lessons Identified.

— LESSONS IDENTIFIED —

LESSONS IDENTIFIED FROM THE SURFLOT

SAFE TO OPERATE – OPERATED SAFELY

INTRODUCTION

Significant numbers of accidents, incidents and near misses associated with the operation of machinery and systems are being reported to HQ each month – for surface units this amounts to a rate of around one every four days. That these incidents and near misses are being reported is good (although the number of near misses reported is likely to be the tip of the iceberg); that there are so many accidents occurring is bad. All of these incidents have something in common: the basic safety argument of SAFE TO OPERATE – OPERATED SAFELY has broken down.

Safe To Operate

Safe to operate starts on board with activity such as maintenance, rounds, application of engineering standards, reporting shortcomings, and understanding the implications of defects. There is clear alignment between operating safety and operational availability. Safety isn't something that should be regarded as additional work, it is a core discipline associated with the delivery of an available platform.

Operated Safely

Most reported incidents have at least some element of failure in the method of operation: SOPs have not been followed because of mistake, lack of understanding or carelessness, or SOPs have been deliberately modified because of extenuating circumstances. One must, however, be careful in assigning blame to an operator and closing one's mind to root cause.

MOVEMENT OF A 4.5" GUN TURRET DURING A 'WEEKLY WAR' WITH A RATING INSIDE.

During a recent Thursday war, during one ship's fifth week at BOST, a gun crew were rectifying defects which FOST staff had injected as simulated damage.

The simulated damage on the 4.5" gun was a loss of power caused by a broken cable which required an emergency run. The primary threat at the time was from mini-submarines and, as the 4.5" gun is the most effective weapon against this threat, restoration of the 4.5" gun was the number one Command priority. The emergency cable run was effective but subsequent mini-SOCs identified that there was no firing circuit. The Captain of the Turret (COT) believed the residual fault to lie in a 'tripped' circuit breaker. After checking the circuit breakers in the 4.5" Gun Power Room he sent the Captain of the Gun Bay (CoGB) to check the circuit breakers inside the turret. The SOP before entering the 4.5" gun turret is to press the "Emergency Stop" as this prevents the gun being moved with a person inside. On this occasion the CoGB entered the gun turret without doing so.

Shortly after, the Gun Controller (GC) in the Ops Room reported to the COT that he had found a fault on the GC System. The system was not receiving correct wind speed and direction inputs – without which it is unable to complete a firing chain. The system was reset from the Ops Room, which took a few minutes, and the fault successfully cleared. The COT then handed control back to the GC to conduct a second set of mini-SOCs which included movement of the 4.5" gun – this was done with the CoGB still inside the turret. The CoGB alerted the COT that he was still inside the turret who immediately requested 'parking' of the gun until the CoGB was clear.

Analysis: In simple terms there was clear failure of the CoGB to follow SOP and of the COT to be cognisant of the man in the turret (ie the gun was not 'operated safely'). This incident could have caused significant injury or fatality and reinforces the link between operating safety and operational availability – the least worse outcome (which fortunately happened in this case) was delay to getting the gun back on line; the worst outcome (ignoring the purely human cost) was lengthy unavailability of the gun and loss of the CoGB. One cannot operate in an action environment with a

Jump to Contents

'safety first' mindset but SOPs must be ingrained to the point where individuals follow them even when under severe pressure (unless there is a conscious and overriding imperative to do otherwise). Finally, it is easy to read this narrative and mentally assign blame in a number of directions thereby dismissing the wider, more difficult issues – could you or your team make similar mistakes when under pressure?

FAILURE OF LIFTING MONORAIL

An external military team visited a ship to collect a pair of boats that had been on loan to the ship. The boats required moving with the use of the ship's monorail lifting system. While the host went to find an authorised user of the monorail, one of the visitors, thinking he knew how to operate the monorail, decided to move the craft himself. Having picked up one of the craft with the hoisting unit, he began tracking the hoisting unit along the monorail. He had, however, not correctly positioned the monorail beams (which themselves can be positioned to provide multi axis movement), and drove the hoisting unit off the end of the first beam. If the monorail beams are not correctly positioned, end stops should prevent the hoisting unit from falling off the end of the beam, but these proved ineffective. Only superficial damage occurred but the accident could have caused significant equipment damage or injury and attendant loss of capability.

Analysis: This incident occurred because of failure in both 'safe to operate' and 'operated safely'. A material shortcoming, ineffective end stops, allowed the hoist unit to be driven of the end of the beam. A key tenet of JSP 430 is the requirement to:

> "*... ensure shortfalls in the safety or environmental performance of the ship's design material state or procedures are notified to the appropriate authority in a reasonable timescale*".[1]

1. JSP 430 4.6.3.

One can only report what one knows and, if this monorail had always been operated within SOP (statistically unlikely over the life of the equipment), the latent fault might reasonably never have been identified. It is nevertheless a salutary reminder of the importance of gaining understanding beyond the 'maker's handbook', particularly for systems that are bespoke or limited in number.

There was also a clear failure in 'operated safely'. The person was not trained to operate the hoist and was not even a member of the ship's company. An authorised user system was in place with a proper training programme but this was totally bypassed by the individual concerned. Again, this is a reminder to ensure briefs to visitors are effective, and of the importance of controlling who operates ship's equipment.

FAILURE OF A SHIP'S BROW

A ship arrived in a foreign port for a routine visit and the brow provided by the local agent was set up accordingly. When positioning the brow, dockyard personnel were forced to climb on top of it to untangle lines – the brow was seen to twist substantially. The gangway was cleared for use but collapsed shortly after, as five personnel were transiting between ship and jetty. Fortunately, no personnel were injured but clearly this was a significant operating safety incident which could have had significant operational impact (loss of five SQEP).

... significant operational impact (loss of five SQEP).

A standard, Single Bar, gangway normally provided in this port was unavailable because of the demand from other units; late notification of the visit had meant that the agent was unable to source a known alternative and only a lightweight folding design could be made available. The brow collapsed when the joint in the middle of the gangway failed.

Analysis: The brow provided by the local agent was not 'safe to operate'. The ship's team responsible for brow safety had evidence of the fact but, despite expressing some concern, did not take positive action. With the benefit of hindsight this proved ill-judged. Judgement and sound risk assessment (whether dynamic or formal), must be applied when operating outside of the standard envelope. Has something changed? If so what are the implications? If it doesn't look or feel right then take positive action before it's too late.

SUMMARY

The responsibilities associated with Operating Safety are clearly laid down in JSP 430 and easy to understand. The enactment of these responsibilities however is much harder in practice and requires intelligent thought. Activity aimed at maintaining operating safety must not distract from the effort to maintain operational capability, but, failings in operating safety almost always have operational impact. The basic safety argument of SAFE TO OPERATE – OPERATED SAFELY, combined with effective risk consideration supports understanding in this task.

The author welcomes all inputs and comments associated with operating safety. A monthly publication, *Risky Business – Lessons*[2], has been established to promulgate accidents, incidents and near misses that are occurring in the Fleet.

2. http://defenceintranet.diiweb.r.mil.uk/DefenceIntranet/Library/Navy/BrowseDocumentCategories/SafEnvFire/NavysaferiskyBusinessLessons.htm.

Jump to Contents

MARITIME COMBAT SYSTEMS
IN-SERVICE MANAGEMENT

By Lieutenant Jamie Weller BEng (Hons) GCGI RN
SSCSG ISM1A , Maritime Combat Systems

Lieutenant Jamie Weller joined the Royal Navy in June 2005. He undertook his Initial Sea Training in HMS Southampton, and his AWEO time in HMS Cumberland. On completion of SEMC Jamie joined HMS Liverpool in refit as one of the section officers and became DWEO once the Ship returned to sea. Upon successful completion of his sea appointment Jamie joined Captain Naval Recruiting's Team as an Engineering Recruiting Specialist, visiting schools, colleges and universities nationwide to encourage engineering careers within the RN. Jamie joined the In Service Management Team within Maritime Combat Systems in DE&S in December 2011 and has recently returned from the Olympics where he carried the Union and Olympic flag at the Opening Ceremony.

Maritime Combat Systems (MCS) is a Principal Engineer led team, which spans the delivery of Combat Management Systems, Sonar, Underwater Warsystems, Electronic Warfare, Communications and Training systems across all major surface ship platforms (including the RFA and Minor Warships), Submarines as well as Special Forces. MCS also manages the Naval Design Partnership in support of the DShips Operating Centre. The MCS team will improve the effectiveness and efficiency of the support and new acquisition of combat system capability and their associated training systems in maritime platforms. MCS provides a single customer and supplier interface, reinvigorating and strengthening MOD as an expert customer for Combat Systems and training systems. MCS operates as the Approving Authority in the Strategic Equipment Authority role and delivers outputs to directly support front line operations though the equipment management function.

Our Mission Statement is:

> "*To deliver safe, available, capable Combat Systems now and in the future*"

The importance of each element of this mission depends on which group within MCS you are considering. For Equipment Authority groups it is generally about Safety and Availability of the equipment being used at sea (and elsewhere) today, and delivery of new equipment (and hence capability) tomorrow.

Other groups, such as the Integrating Authority (IA), are helping to ensure that new and changed equipment is delivered with minimal technical risk and hence cost. The In-Service Management (ISM) team is focussed on the Fleet today, ensuring that safe systems are documented through sound process and practice. The Engineering Services group will continue playing their part in both the IA and ISM tasks. Combat System Engineers in the Queen Elizabeth and Global Combat Ship classes are clearly focussed on delivering Safe and Capable Combat Systems of the future.

Together, the various groups work under the unifying Business and Programme Management processes to deliver its full part of the Director Ships mission:

> "*Putting the fleet to sea and keeping it there fit to fight now and in the future*"

UPDATE ON CURRENT ISSUES

UMMS Concessions

There is still an issue with the management of UMMS concessions both in the ship and shore environments. Recent discussions during the UMMS User Working Group Meeting have highlighted this issue and it has been suggested that there should be a re-write of BR 1313 Chapter 5 to clearly identify who is responsible for authorising concessions and to clarify the "local management" of Checklist items. Ship Management teams should discuss any concerns or questions regarding UMMS concessions with ISM1e (WO1 Pete Jones).

… who is responsible …?

PMAG Roll-Out

UMMS v5.1.1, which includes the Platform Material Assessment Grid (PMAG) and auto-daily replication, continues to be rolled out with a plan to have all major platforms updated prior to July 2013. FOST and MCTA have already "bought in" to PMAG and it has been trialled successfully on a couple of Type 23s. Mr John Puplett (ISM2a1) is responsible for maintaining the MCTA database and it is the aspiration that ISM will conduct a transfer of outstanding items from this database to the defect list within the relevant platform's UMMS database to allow SS full visibility of all of their pick-ups, negating the requirement for an After Action Log. Obviously this is not a quick fix and will take some time to achieve. Individual ships will be notified once this transfer of data has taken place.

Jump to Contents

Certificates of Clearance for Use

Certificates of Clearance for Use (CCUs) are required for all Naval weapon systems and Combat System equipment (including Military Tasking Equipment (MTE)) that are in service, but have not yet achieved acceptance at Full Operating Capability (FOC).

Equipment may not be used operationally until a valid CCU, which accurately reflects the fitted hardware and software configuration, has been formally issued.

CCUs will continue to be authorised for all equipment that is yet to achieve FOC, but will now also be issued to all systems post-FOC that undergo hardware/software updates, or when deemed necessary by the Platform Duty Holder.

All MTE not at FOC requires a CCU for operational use, as detailed in the Navy Plan, unless previously agreed by Platform Teams and endorsed by NCHQ.

Unsigned or out-of-date CCUs do not represent authority to use a particular equipment fit operationally and a CCU will not be issued until any TEMPEST requirement has been met.

The CCU involvement in the Combat Systems Certificate (CSC) process is to ensure that CCUs are only available to front line units once they have successfully completed all the required trials.

DIN 2012DIN04-056: http://defenceintranet.diiweb.r.mil.uk/NR/exeres/A00EC4B1-88D8-4F80-AE34-BC1D40766E99,frameless.htm

CCU AoF Submission: http://www.aof.dii.r.mil.uk/aofcontent/tactical/maritime/content/mar_ccu.htm

Combat Systems Certificate

The CSC is a document which provides a single reference point for Ships' Staff (SS) and Duty Holders to view the clearance status of the CS for each platform. This is done by stating whether systems (in a specific hardware/software state) are cleared for operational use on a platform and if not, why not.

The introduction of CSC has enabled increased Combat System Capability Assurance in Service by providing Operating, Platform and CO Duty Holders greater assurance that Combat Systems at sea are in a known and safe state by:

- Facilitating improvements in the issue and control of CCU to be employed by all stakeholders for equipment yet to achieve FOC.
- Controlling 'clearance to use' for all Combat System equipment during all stages of platform regeneration, irrespective of acceptance status.

In summary, the CCU and CSC processes are essential to assure that capability is delivered to RN platforms in a safe manner, form an integral component of the equipment safety case and inform the user community of any limitations or constraints imposed on the equipment. Equipment may not be used operationally until a valid CCU, which accurately reflects the as fitted hardware and software configuration, has been formally issued.

RNTM 020/12 – CSC RNTM Includes the planned roll out, which will eventually expand to include MPH.

SHIPHAZ

NCHQ is currently leading a review on SHIPHAZ Policy which is expected to be ratified by the Naval Radio Hazards Committee in September 2012. The review is currently examining several areas, including the "Ship in Harbour" line on the SHIPHAZ board, training, underwater hazards, documentation and the number of White Tallies being issued. Once the policy has been ratified and the boards assessed by a SQEP panel, new SHIPHAZ Boards will be issued to ships in early 2013.

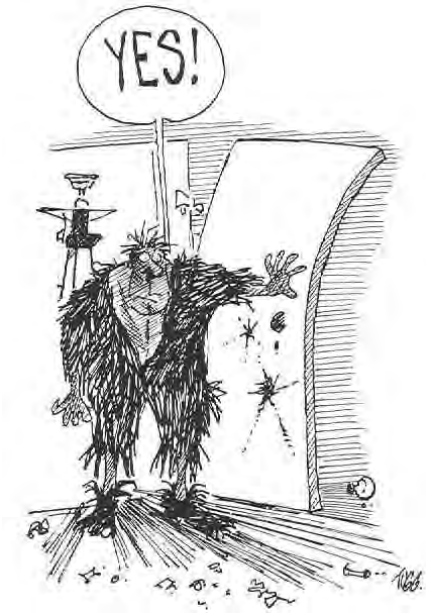

"Is there a SHIPHAZ?"

TEMPEST

The new TEMPEST RNTM is soon to be issued which will reinvigorate the way TEMPEST testing is assured. Key differences from the old policy are:

- Ships will undertake a TEMPEST test as part of upkeep and this remains valid until the next update (except MTE). MTE is still to be tested when fitted.
- The list of equipment subject to TEMPEST test/inspection has been increased, covering all equipment processing CONFIDENTIAL and above information.

The new policy is mainly targeted at ships emerging from Upkeep, as the TEMPEST testing period increased to 7-10 days. Ships have already been provided with a list by MCS which details which equipment is subject to a TEMPEST test/inspection. For ships in Fleet time, a best endeavours approach should be followed, drip feeding equipment on the list into the normal TEMPEST testing regime. Ships which are currently in upkeep, or will shortly be in upkeep, will

Jump to Contents

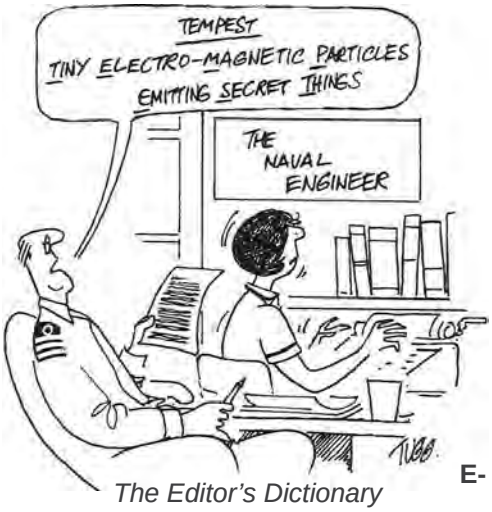

The Editor's Dictionary

GLOSSARY OF TERMS

CCU	Certificate of Clearance for Use
CSC	Combat Systems Certificate
FOC	Full Operational Capability
IA	Integrating Authority
ISM	In-Service Management
MCS	Maritime Combat Systems
MCTA	Maritime Capability, Trials and Assessment
MTE	Military Task Equipment
PMAG	Platform Material Assessment Grid
SS	Ships' Staff
TEMPEST	Unclassified codeword for the unintentional radiation or conduction of compromising emanations from communications and information processing equipment
UMMS	Unit Maintenance Management System

have a 'TEMPEST Assurance Schedule' generated for them. This document will list, by compartment, every system which is subject to TEMPEST testing/inspection. This can then be provided to the TEMPEST test team to ensure that all equipment is captured.

MCTA Defects

Although MCTA defect pick-ups may not lie with SS to action/complete, it is still SS' responsibility to ensure that they report to MCS (ISM2a1) when items have been completed. There have been several recent instances where CCUs which were task specific could not be issued, as MCTA defects had not been reported as complete. The prompt reporting of completed defects will ensure that all documentation can be released to the ship in a timely manner.

E- Fit to Receive Log

After the success of Minor Trial "FSR", the E-FTR Log is now in the process of being rolled out to the Surface Flotilla. Type 23s and Type 45s have already been issued with their Logs, with other classes of ship to follow shortly once a FTR validation exercise has been conducted by the MTE team. Ships will find this a vast improvement on the previous paper version of the FTR Log and any feedback should be forwarded to WO1 Pete Jones (DES Ships MCS-SSCSG-ISM1e).

WANT TO KNOW MORE?

DES SHIPS MCS SSCSG ISM POINTS OF CONTACT

TITLE	NAME	PRIMARY ROLE	TEL CONTACT
ISM	Cdr Mark Hocking	In–service Manager	9679–32106
ISM1A	Lt Jamie Weller	Capital Ships Lead Officer	9679–32147
ISM1B	Lt Jim Teasdale	SC Lead Officer	9679–32288
ISM1C	Lt Cdr Keith Bowers	Type 45 Lead Officer	9679–36425
ISM1D	Miss Lorraine Rimmer	Type 45 Acceptance	9679–37421
ISM1E	WO1 Pete Jones	UMMS Concessions/Ship Interface	9679–32311
ISM1F	WO2 Paul Foster	CCU/Ship Interface	9679–32122
ISM1G	CPO David Roberts	MPH Lead	9679–32667
MTE1	WO1 Adrian Boswell[1]	MTE Management	9679–35735
MTE2	WO1 Chris Parry	MTE Management	9679–33100
ISM2	Mr Mike Fulthorpe	CS Safety Manager	9679–39660
ISM2A1	Mr John Puplett	Trials Items and S.2022 Lead	9679–32161
ISM3	Lt Cdr Jon Pollard	Combat System Engineer	02392–312644
ISM3A	Lt Ross Coyle	Combat System Trial Manager	02392–312643

1. tbrb WO1 Pete Salmon

BZs

Congratulations to the RN Engineers who have recently been awarded the Meritorious Service Medal (MSM):

CPOAEA(M) J D B Bawden
CPOAEM(M) M J Dryhurst
WO2AET R A Harris
WO1ET(WESM) I C Hurst
WO1ET(ME) D N Markland
WO2ET(MESM) S G O'Kane
WO1MEM(M) L S Robertson
WO2AET G R Bonds
CPOAEM(AV) M J Harding
WO2ET(ME) S Hickman
CPOET(WESM) S Johnson
WO1ET(ME) S McCluskey
WO2(AET) R Reed
WO1ET(ME) T Ward
WO2ET(WESM) S M Way

RN ENGINEERS OPEN 2012

The annual RN Engineers Open was held at Trethorne Golf Club, Launceston, on 3 September 2012. The Overall Champion was PO Matt Smith (runner up WO1 Tommo Thompson). The AM Net Medal winner was WO2 Neil Apps, (runner up Neil Smith), and the PM Stableford was won by CPO Russ Chadwick, (runner up CPO Ritchie Cunningham). A detailed report will be published in the next issue of TNE.

Jump to Contents

HMS TRIUMPH
MAIN MOTOR GENERATOR REPAIR

Lieutenant Bartholomew Nelson BEng(Hons) PGDip(NRT) MIET RN
Assistant Marine Engineer Officer (Ship Systems), HMS Triumph

Lieutenant Bart Nelson joined the Royal Navy in September 2007, having been educated at Monmouth and Birmingham, where he read electronic and electrical engineering. Following initial officer training at Dartmouth, and nuclear and engineering training at HMS Sultan, he qualified as a Category A nuclear watchkeeper in April 2011. Having initially taken responsibility for the propulsion section, he transferred to the head of ship systems in March 2012. He is hoping to qualify MCQ in November 2012 and his long term career aspirations include working on the Successor submarine design and DMEO, perhaps of an A-class.
He lives in Herefordshire with his girlfriend Liz, a doctor, with whom he enjoys horse-riding and sailing.

INTRODUCTION

On a British nuclear submarine, the ship's electrical system is designed to be reliable, resilient and capable of being aligned for normal, abnormal and emergency modes of operation. The basic schematic is shown at Figure 1 below.

The system comprises an AC and DC system. The AC system is supplied by two steam turbine generators (TGs) when the reactor is critical and a three cable shore supply when the reactor is shut down and the submarine is in port. This system is split into two sides, each of which is further divided into 'essential' and 'non-essential' supplies. The essential supplies provide the nuclear base load and submarine safety systems, such as hydraulic pumps and lighting, while the non-essential supplies provide services such as auxiliary cooling and fluid systems.

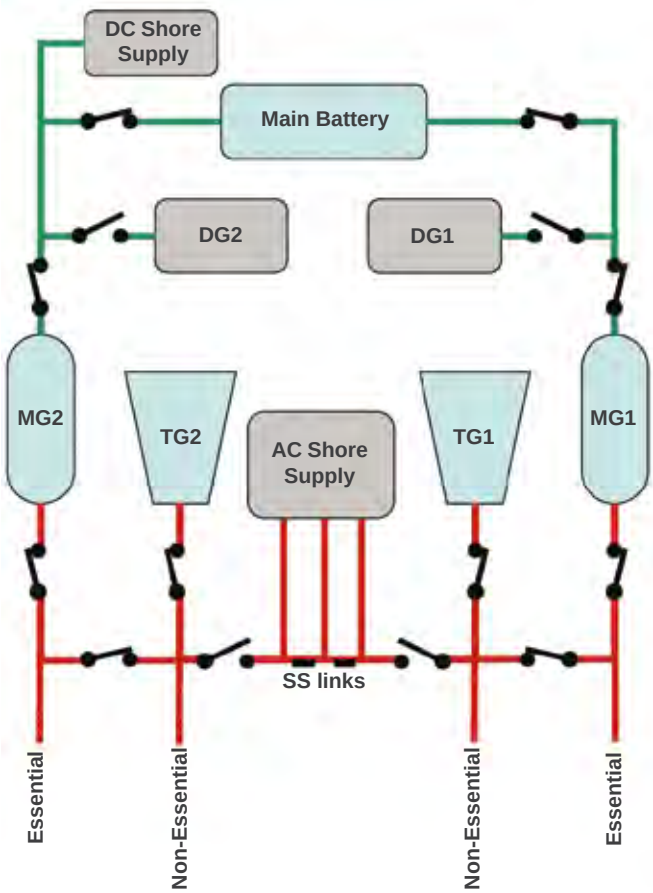

Figure 1: The submarine's electrical distribution system in the normal seagoing alignment

The DC system is supplied from the submarine main battery and two diesel generating sets, and occasionally a DC shore supply connection is used when the main battery is laid off. This DC system is predominantly used in the event of reactor shutdown to support the nuclear base load and propulsion systems prior to restarting the reactor plant to provide steam to the TGs.

Two main motor-generators (MGs) convert between AC and DC systems, allowing the AC system to be energised by the battery or submarine's diesel generators when the TGs are shutdown in addition to the AC shore supply and to charge the battery when the TGs are available. When the submarine is in port and shore supply is connected, machines which have a starting current greater than that provided by shore supply may be started by 'backing off' – temporarily reducing the load on the shore supply by taking load through the MGs on to the battery.

The MG is constructed with a common rotor synchronous AC end opposing a six pole compound wound DC machine. Machine current is exchanged between the AC busbar via three brush holder assemblies, each containing two brushes per phase, as shown at Figure 2 opposite.

DEFECT AND RECTIFICATION

In late October 2011, sparking was observed on two of the phases of the port MG (MG2) slip rings, which progressively degraded while transiting through the Mediterranean towards Suez. When the machine was shutdown, ovality and discolouration were noted on all three phase slip rings, combined with high rates of brush wear. The machine was cleaned and monitored more frequently to assess the rate of degradation, and spark codes were used to assess the severity of the sparking and deterioration while the machine was running. When the MG was shut

Jump to Contents

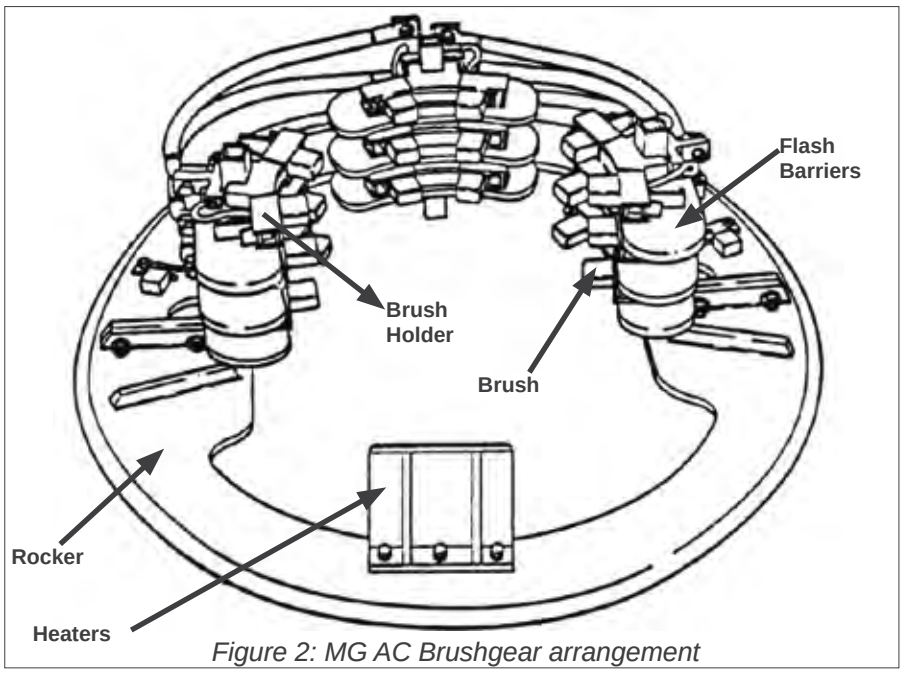

Figure 2: MG AC Brushgear arrangement

down, more intrusive tests could be completed, including eccentricity of the slip rings, condition and wear rate of the brushes and the resistance of the brushgear and fields. Figure 3 shows the damage observed to the slip rings and brushes.

The slip rings deteriorated further, and it was clear that replacement was required. The port MG was shutdown to minimise further degradation while the submarine completed the transit and was only run when the submarine was required to be at a heightened state of readiness.

The submarine completed the transit through the Suez Canal and berthed alongside the afloat forward repair ship RFA Diligence, which has a very robust electrical generation system. To maintain electrical integrity and support for the reactor plant, two independent shore supplies were required: one cable supplying port essential and non-essential busbars, and two cables supplying starboard essential and non-essential, as shown at Figure 4. All shore supplies were energised from independent diesel generators onboard Diligence.

Some heavy electrical loads are supplied by the port busbars which were unable to be backed off because the port MG was shut down and thus unable to be restarted. For example, if the ventilation fans were stopped, they would not be able to be restarted, limiting airflow and potentially causing habitability issues if the submarine's compartments warmed up to an ambient temperature of approximately 45°C. For this reason, careful control of the submarine's electrical systems and equipment were necessary when operating in a different and unusual alignment.

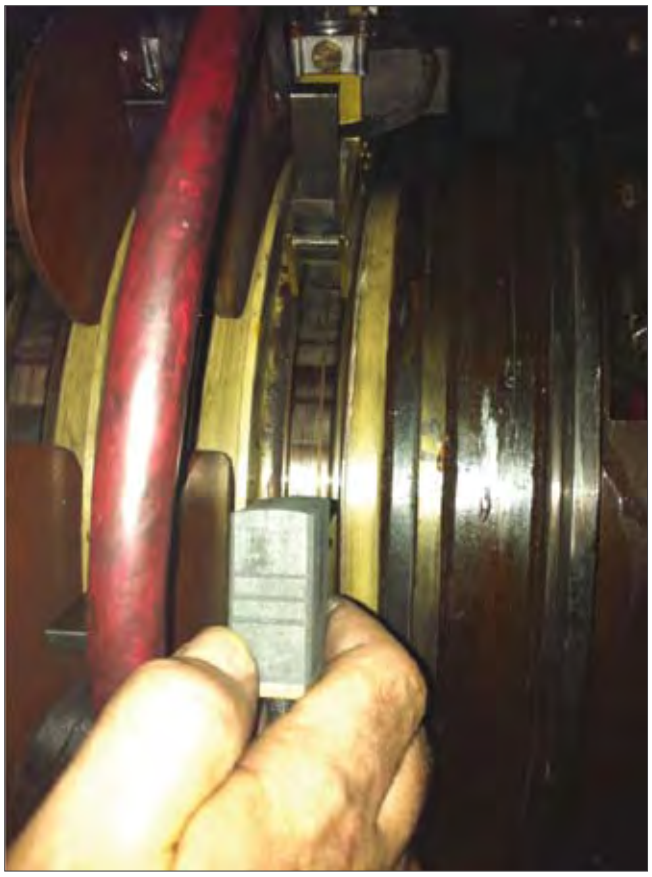

Figure 3: Damage to slip rings and brushes

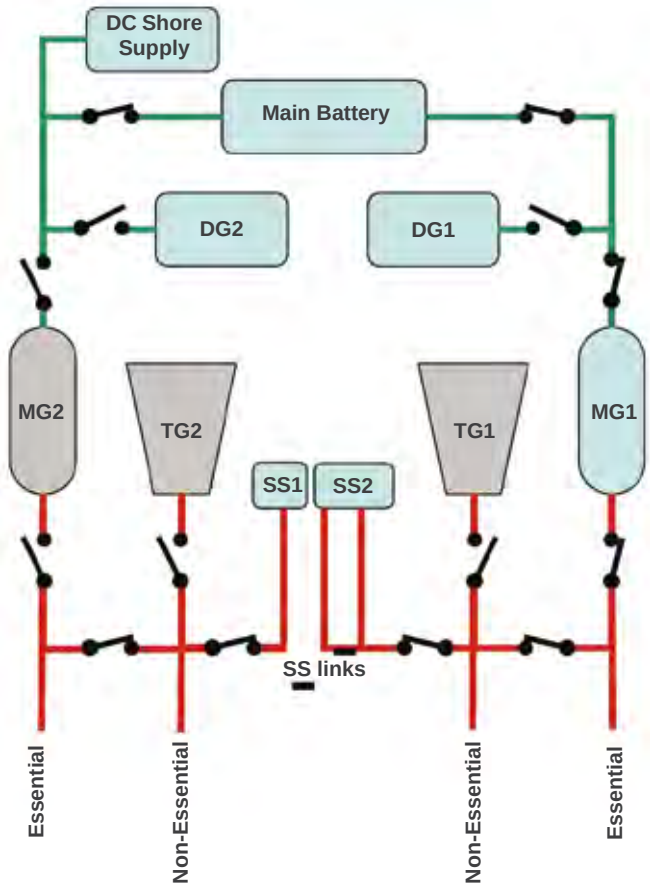

Figure 4: Electrical distribution system aligned for MG repair

Jump to
Contents

Figure 5: Location of the Diesel Room

The MGs are located in the diesel generator room, Figure 5, directly adjacent to the diesel generators. The diesel room also contains two hydraulic plants and various high-pressure fluid systems, which restrict access and limit the space available for slinging large items. In addition to this, the submarine was berthed in a tropical environment which caused humid working conditions. The machine was mechanically and electrically assessed. The slip rings were in a poor physical condition, but electrically the machine was sound, field windings were balanced and of high insulation resistance, the brushgear, whilst worn, showed no signs of impending failure, and the riser cables were in good condition, having been previously replaced.

From the initial survey, a plan was produced: remove and replace the slip rings, survey the machine, and set the MG to work on completion. The exigencies of the submarine environment required input from all departments to ensure work could proceed without interference. Permission was obtained from the operating authority to shut down the port MG when the reactor was shut down and more reliant on shore supplies, and therefore required special dispensation. This was negotiated between the operating authority, the operations and maintenance team, the technical authority and the submarine. The requirement for separate AC shore supplies was a key condition of the permission. While the submarine's auxiliary systems could have been adversely affected by the shore supply alignment and required careful control, as described earlier, reactor safety was assured. The plan was detailed in writing in the form of a Commanding Officer's Temporary Memorandum and ensured procedural oversight could be demonstrated to the management team.

Shift leaders were selected, and the teams were required to work around the clock to ensure timely completion, thus mitigating any possible problems encountered later. Obstructions in the diesel room required the access route to be the priority, and this was started once shore supply was connected and proved. The work site was then fully prepared for the repair. The diesel room was deep cleaned in the vicinity of the MG, preventing grease, oil and carbon contamination of components, and stowages were identified for the parts of the MG which had to be removed for access.

The slip rings are an interference fit on the rotor shaft which required heat treatment to remove and new slip rings to be fitted and aligned. The slip rings and brushgear were electrically tested using a micro-ohm meter throughout their locus.

The machine was reassembled and the access route restored. The MG was test run, and left on load to prove and bed in the new brushgear and slip rings. Once this was complete, the machine was shutdown, surveyed and subjected to extensive mechanical and electrical tests. When completely satisfied with the operation of the MG and, because of the limitations imposed by the split shore supplies, the submarine's diesel generators were run. Shore supply was disconnected and the electrical system was restored to the normal harbour alignment of a single AC shore supply with all links inserted.

CONCLUSION

It is believed that the cause of the slip ring failure was a defective riser cable, which transfers current from the rotor to the busbar. A high impedance cable could have caused a current imbalance between phases leading to damage on the remaining phases. Although the defective cable was replaced very quickly, the latent effects were more insidious and difficult to measure. Following initial indication of sparking, it is believed that the initial damage to the slip rings caused a positive feedback cycle of further damage to all three slip rings.

The repair was a success because of the logical sequence used for defect rectification. Good communication with the inboard support organisation and experience from other platforms was invaluable to the planning process. Independent shore supplies from Diligence required extra wiring and termination than is usually provided to submarines deploying East of Suez and this was identified early, giving enough time to prepare the extra arrangements.

As well as meticulous preparation, briefed to all involved, and attention to detail, the continuity of effort allowed thorough handovers between shift supervisors. The repair also provided the more junior members of the department with a unique training opportunity, because the MGs are in constant use and not frequently disassembled. The submarine subsequently completed her deployment with no further MG defects.

Jump to Contents

BZ – 2011 FLEET ENGINEERING EXCELLENCE AWARD

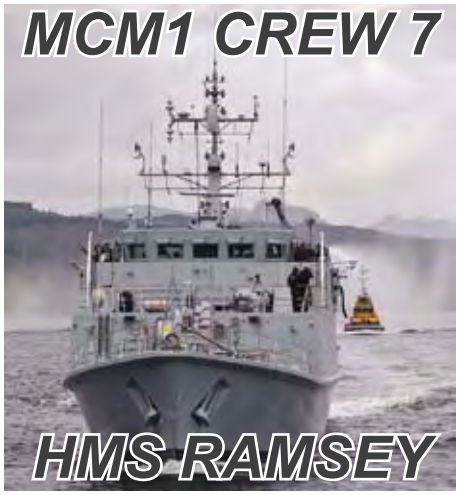

The 2011 Fleet Engineering Excellence Award is awarded to the combined Marine and Weapon Engineering team of MCM1 Crew 7, serving throughout this award period on the Sandown class minehunter HMS Ramsey.

The proactive nature of this team was well illustrated in its management of an emergency docking and the subsequent recovery from identified Voith Schneider Propulsion Unit oil contamination, whilst still meeting all milestones in a taut and challenging regeneration programme. The team's deliberate application of high engineering standards has resulted in exceptional levels of equipment availability throughout Operational Sea Training and during Tier 2 training on Exercise Joint Warrior.

A theme of initiative and perseverance prevailed during the ship's transit beyond the immediacy of external support, including the under-resourced remote exchange of a main engine and a generator, amongst other in-situ repairs and defect management; this such that Ramsey arrived in the Kipion Joint Operations Area in a good material state.

This determined team has repeatedly demonstrated the ability to maintain continuous availability of equipments at 12 hours Operational Notice for sustained periods. Challenged by complex and compounded equipment defects, as recently evident in Ramsey's sonar issues, excellent liaison with and management of external resource has been a critical success factor. Communication with external authorities has been a particular strength, through timely reports and returns.

The results of their endeavours are especially impressive given the challenges of engineering in a variety of markedly different environments, from their regeneration during the uncomfortably exposed and demanding conditions of a winter in the northern reaches of the UK to operating as a Kipion unit in the oppressive heat and 100% humidity of one of the hottest Arabian Gulf summers on record. Each member of this small team, continuously bearing significant responsibility and weight of work, contributes selflessly to consistently impressive engineering output. As individuals and a collective they have received praise from several quarters despite the engineering difficulties presented this period. Overall, it is the consistency of this team's success that marks them apart from those of other MM engineering departments in these lean times.

This award highlights a thoroughly deserving and successful team who have cohesively been the underpinning bedrock of Ramsey's continued operational success, affirming the UK's world-leading MCM capability in the Arabian Gulf JOA to indeed be the Royal Navy's Jewel in the Crown.

BZ – OPERATIONAL ENGINEERING AWARD 2012

LIEUTENANT COMMANDER WAYNE STAFFORD RN

Lieutenant Commander Stafford[1] has played an extremely significant role in three separate operational theatres in a time span of just 12 months. His efforts have already merited CJO's and CINCFLEET's commendations for Afghanistan and Op Ellamy respectively, but his recent efforts on a strategic intelligence gathering mission, as HMS Tireless' Weapons Officer, are equally worthy of recognition. Throughout, he has applied direct leadership, profound engineering judgement and innovation to solving technical problems.

In Afghanistan his technical skills were pivotal in the establishment of an International Coordination cell, which provided a much needed focal point for improved Afghan, Coalition and International joint working. During Op Ellamy, as HMS Triumph's Weapons Officer, he successfully managed a number of defects on the weapon system which enabled the delivery of capability to great effect. His technical prowess and innovation allowed Triumph to integrate with Coalition forces, significantly expanding her Operational effectiveness. Onboard HMS Tireless, he directed the repair of mission essential communications equipment through extremely innovative repair techniques, the results of which enabled the submarine to remain on task to complete her mission.

Overall, an outstanding operational engineering performance in three differing Theatres most worthy of this award.

1 Lt Cdr Stafford has recently been selected for promotion to Commander.

Jump to Contents

Bravo Zulus

Congratulations to the RN Engineers who were awarded honours in the 2012 Birthday Honours List:

Commander of the Most Excellent Order of the British Empire (CBE)

Rear Admiral S.J. Lloyd

Officer of the Most Excellent Order of the British Empire (OBE)

Captain J.R.M. Plant

Member of the Most Excellent Order of the British Empire (MBE)

Warrant Officer 1 Engineering Technician (Marine Engineering Submarines) B. Hall
Lieutenant Commander I.S. Hobson
Warrant Officer 1 Marine Engineering Mechanic (Mechanical) J.C. Walker

Queen's Volunteer Reserves Medal

Air Engineering Mechanic M. Ping

Jump to Contents

INDEX

Journal of Naval Engineering — *December 2008 to June 2010*
Review of Naval Engineering — *Autumn 2008 to Summer 2010*
The Naval Engineer — *Autumn 2011 to Summer 2012*

1 – GENERAL ENGINEERING, including Publications, IT, H&S
2 – AIR ENGINEERING
3 – MARINE ENGINEERING
4 – WEAPON ENGINEERING
5 – SUBMARINE ENGINEERING (specific)
6 – TRAINING AND QUALIFICATIONS
7 – OPERATIONAL SEA TRAINING
8 – PERSONNEL
9 – LETTERS TO THE EDITOR
10 – HISTORY
11 – MISCELLANEOUS

This Index covers RNE Vols 62–63 (Autumn 2008 to Summer 2010), JNE Vols 44–45 (December 2008 to June 2010) and TNE Vols 1–2 (Autumn 2011 to Summer 2012). The Index can be found in Number 1 of every even numbered volume of RNE and TNE.

Full RNE and TNE indexes and soft copies of recent back issues are available at: http://cwd-r-web-001.cwd.dii.r.mil.uk/mws_csg/publications/naval_engineering.html. Back issues of JNE can be found through the JNE Internet webpage: http://www.jneweb.com/login.aspx.

The editor holds a full library of previous magazines back to RNE Volume 1 Number 1 (1947), and will be pleased to assist in any search for an earlier article.

Jump to Contents

Jump to Contents

Jump to Contents

Jump to Contents

Jump to Contents

One of the new members of the Engineer Flag Officers' Meeting:

Rear Admiral Ian Jess MA MSc MA CEng MIMarEst
Assistant Chief of Naval Staff (Support)

Assistant Chief of Naval Staff (Support) is a new post, with evolving responsibilities which will include:

- NCHQ lead on Force Generation Process.
- Operating Duty Holder for Ships, Submarines and 3 Commando Brigade.
- Lead for Logistics and Engineering policy.
- Leading the transitional work for the changes of governance for the Naval Base ownership.
- Leading NCHQ engagement on the development of Maritime Support Delivery Framework requirements.
- NCHQ engagement with Maritime Change Programme.

Ian Jess joined the Royal Navy in 1978 and, after initial training at BRNC Dartmouth, undertook an Engineering Degree at Cambridge.

His early career followed the normal pattern for the time and he was DMEO in HMS Cardiff, Project Officer in HMS Sultan, Recruiter within DNR, MEO in HMS Nottingham and Sea Rider on the Staff of Flag Officer Sea Training, where he was selected for promotion to Commander. He also undertook the Advanced Marine Engineering Course at the Royal Naval Engineering College at Manadon.

Having completed the Royal Navy Staff Course and achieved an MA in Defence Studies, he spent two years as Cdr(E) in HMS Invincible before joining the MOD (Procurement Executive) at Abbey Wood for the first of a succession of appointments within Acquisition and Support as a Commander, responsible for Marine Engineering aspects of Type 23 Frigates and then as a Captain, where he led the Marine Engineering Equipment Project Team and the Major Warships Platform Project Team. He also led aspects of Smart Procurement implementation for the Ships Support Agency and the Defence Logistic Organisation. As a Commodore he held the post of Director Logistics Maritime Platforms through the transition from the Warship Support Agency to the Defence Logistics Organisation and subsequently as the post became Director Surface Warships within Defence Equipment & Support.

He commanded HM Naval Base Devonport from 2008 to 2010, and initiated a wide ranging programme of infrastructure changes which have led to the sale of part of South Yard, a significant expansion to the Royal Marines Recovery and Rehabilitation facilities, the move of Landing Craft Coxswain and engineer training from RM Poole, and the early stages of construction for an innovative Energy from Waste industrial plant. Subsequently he has assumed responsibility for the three Naval Bases as an Operating Centre Director within the Maritime Domain in DE&S. Rear Admiral Jess has retained this DE&S responsibility while also assuming the new role of ACNS(Support) within Navy Command.

Ian Jess is married to Clare, lives in Bath, and spends most time outside work supporting the interests of their children, Amy(12) and Sam(9).

Jump to Contents

The newest member of the Engineer Flag Officers' Meeting:

Rear Admiral Jonathan Woodcock BSc(Hons) CEng MIMechE OBE
Assistant Chief of Naval Staff (Personnel) and Naval Secretary

Under the Second Sea Lord, ACNS(Pers)/NavSec is responsible for the sustainable delivery of Sufficient, Capable and Motivated personnel to the Naval Service in support of Defence Outcomes.

Educated at Ryde School on the Isle of Wight, Jonathan Woodcock joined BRNC Dartmouth in September 1980 before reading his Engineering Degree at RNEC Manadon, graduating with an honours degree in 1984.

His first complement appointment was as DMEO of HMS Exeter and this was followed by an appointment to HMS Sultan. He then returned to sea as the Electrical Officer in HMY Britannia.

Promoted Lieutenant Commander in 1991, in July 1992 he was appointed to a NATO exchange position as the Assistant Technical Officer to the Canadian Second Maritime Operations Group in Victoria BC, operating in the Pacific. Dragged home in 1995, he was appointed as MEO of HMS York, joining and leaving during Armilla deployments. Appointed to the second Advanced Command and Staff Course, he was selected for promotion to Commander whilst at Bracknell.

Following promotion to Commander, in September 1999 he was appointed to the Warship Support Agency as the Head of the Machinery Trials Unit, followed by two years as Commander (E) of HMS Ark Royal, including Operation Telic where he was the Staff Marine Engineer to the Amphibious Task Group. He left Ark Royal in December 2003 and was appointed to the MOD as Chief of Staff to the Capability Manager Precision Attack.

On promotion to Captain in March 2005 he was appointed to command the Royal Naval School of Marine Engineering at HMS Sultan, where his team implemented the training changes necessary to implement the ET(ME) branch structures and set up a significant "modernisation of learning" programme. In recognition of this work he was honoured with the OBE. In January 2008, he took command of HMS Raleigh where he served for two amazing years; he left to commence RCDS in January 2010.

Promoted to Commodore in April 2010, he was appointed to be Head of Pay and Manning in the Ministry of Defence. This appointment coincided with the SDSR and as a result he was responsible for the implementation of the reductions in size of the Armed Forces through redundancy, implementation of the Government's pay freeze and delivery of significant reductions in the allowance package. In January 2012 he was appointed to the Fleet HQ as Director Naval Personnel and on 11 September 2012 was promoted to Rear Admiral and appointed as the Naval Secretary and Assistant Chief of the Naval Staff (Personnel).

Jonathan is married to Joanna; they have two children, Alexandra (1991) and Thomas (1994). They enjoy all country activities, keep bees and most importantly, as a family, love skiing.

Jump to Contents

WEB EDITION AUTUMN 2012

AUTUMN 2012 WEB EDITION